SHEET INDEX

CONTENTS	SHEET NO.	SHEET ISSUE NO.
SHEET INDEX OPTION INDEX SUPPORTING INFORMATION	A1	9
DESIGNATION MNEMONICS INDEX	A2	8
APPARATUS INDEX	A3	9
MEMORY EXPANSION, SIDE 0		
POWER CONVERTER	B1	8
MAIN STORE MEMORY ARRAY	B2	8
DATA SIGNAL, SIDE 0	B3	8
ADDRESS & CONTROL, SIDE 0	B4	8
MAIN STORE MEMORY ARRAY	B5	9
ALARM SIGNAL, SIDE 0	B6	9
MAIN STORE MEMORY ARRAY	B7	8
	B8	9
	B9	8
	B10	8
	B11	9
POWER & GROUND LUGS	B12	8
MEMORY EXPANSION, SIDE 1		
MAIN STORE MEMORY ARRAY	B13	9
	B14	8
	B15	8
	B16	8
	B17	8
	B18	9
ALARM SIGNAL, SIDE 1	B19	9
ADDRESS & CONTROL, SIDE 1	B20	8
MAIN STORE MEMORY ARRAY	B21	8
	B22	8
POWER CONVERTER	B23	8
POWER & GROUND LUGS	B24	8
APPARATUS FIGURES	C1	9
CIRCUIT NOTES	D1	8
EQUIPMENT NOTES	D2	8
INFORMATION NOTES	D3	9
UNIT SYMBOL TABLE OF CONTENTS	GB1	8
CIRCUIT ACCESS REFERENCE DATA	GB2	8
CAD 1	G1	8
	G2	8
	G3	9
	G4	8

OPTION INDEX

APP OR WRG	RATED ON ISSUE	REF NOTES	LOCATION
3	1		APP FIG. 3
Z	1		FS 1, FS 2
Y	1		FS 1, FS 2
X	1		FS 1, FS 2
W	1	306	FS 1, FS 2
V	1		FS 1, FS 2
U	1		FS 1, FS 2
T	1		FS 1, FS 2
S	1		UNASSIGNED
R	1		UNASSIGNED
Q	1		UNASSIGNED
P	3AC		FS 1, FS 2
N	3AC		FS 1, FS 2
M	3AC		FS 1, FS 2
K	3AC	305	FS 1, FS 2
J	3AC	305	FS 1, FS 2
G	5B	306	FS 1, FS 2
F	5B		FS 1, FS 2
E	5B		FS 1, FS 2
D	5B		FS 1, FS 2
B	5B		FS 1, FS 2
A	5B		FS 1, FS 2
ZA	5B		FS 1, FS 2
ZB	6A		FS 1, FS 2
ZC	6A		FS 1, FS 2
ZD	7B		FS 1, FS 2
ZE	7B		FS 1, FS 2
ZF	8B		FS 1, FS 2
ZG	8B		FS 1, FS 2
ZH	8B		FS 1, FS 2
ZJ	8B		FS 1, FS 2
ZK	8B		FS 1, FS 2
ZL	8B		FS 1, FS 2
ZM	8B		FS 1, FS 2
ZN	8B		FS 1, FS 2
ZP	8B		FS 1, FS 2
ZQ	8B		FS 1, FS 2
ZT	9B		FS 1, FS 2
ZU	9B		FS 1, FS 2

DWG ISS	CD ISS	DWG ISS	CD ISS	DWG ISS	CD ISS
1	1 APPX –	2A	2A APPX –	3AC	2A APPX 1AC
4B	2A APPX 2B	5B	2A APPX 3B	6A	2A APPX 4A
7B	2A APPX 5B		APPX		APPX

DWG ISS	CD ISS	DATE ISSD	DRN	APP
8B	2 APPX 6B	6-2-95		
9B	2 APPX 7B	5-28-96		

SUPPORTING INFORMATION

SYSTEM USED ON	DESIGN CONTROL	CATEGORY	NO.
5ESS	IH	EQUIPMENT DRAWING	J5D003BH
5ESS	IH		SD5D118-01
			SD5D118-03

SHEET INDEX NOTES

1. ONLY THE LATEST ISSUE, OR ISSUES IF CONCURRENT, ARE SHOWN IN THE INDEX.
2. FOR REISSUES, A CHANGED OR NEW SHEET IS ASSIGNED THE SAME ISSUE NUMBER AS SHEET 1.
3. THE ISSUE NUMBER OF SHEET 1 IS RECOGNIZED AS THE ISSUE NUMBER OF THE WHOLE DRAWING.

Copyright (C) 1996 AT&T
All Rights Reserved

BT13

5ESS® SWITCHING EQUIPMENT
MEMORY EXPANSION UNIT
CIRCUIT

DWG SIZE	ISSUE
C2	9B

AT&T	SD-5D048-01	SHEET A1 OF 37

PRINTED IN U.S.A.

DESIGNATION MNEMONICS INDEX

MNEMONIC	DEFINITION
+5V04C(0,1)	PLUS 5 VOLTS, CONTROLLER
-4804LC(0,1)	MINUS 48 VOLTS, CONTROLLER
08MB0	SIDE 0, 8MBYTE MEMORY ARRAY INDICATOR
GRD	GROUND
SPARE(01-27)	SPARE NET
0ADPC00	SIDE 0, COLUMN ADDRESS PARITY
0ADPR00	SIDE 0, ROW ADDRESS PARITY
0A02IB	SIDE 0, MEMORY ADDRESS BIT 02B
0A02IB0	SIDE 0, MEMORY ADDRESS BIT 02B, ACTIVE LOW
0A02IB1	SIDE 0, MEMORY ADDRESS BIT 02B, ACTIVE HIGH
0A02I0	SIDE 0, MEMORY ADDRESS BIT 02, ACTIVE LOW
0A(03-21)I1	SIDE 0, MEMORY ADDRESS BIT 03 THROUGH 21, ACTIVE HIGH
0A19I0	SIDE 0, MEMORY ADDRESS BIT 19, ACTIVE LOW
0A22I1	SIDE 0, MEMORY ADDRESS BIT 22, ACTIVE HIGH
0BDI(0-3)0	SIDE 0, BUFFERED PARITY BIT, BYTE (0-3)
0BD(A,X,Y,Z)0	SIDE 0, BUFFERED HAMMING BITS A, X, Y, AND Z
0BD(00-31)B1	SIDE 0, BUFFERED MEMORY DATA BIT (00-31), ACTIVE HIGH
0C(+,-)CP04L	SIDE 0, CURRENT PROGRAM BUS
0CAL(M,MP)	SIDE 0, CONVERTER ALARM
0COOS(04L,48P)	SIDE 0, CONVERTER OUT OF SERVICE
0CSC04L	SIDE 0, CONVERTER SET POINT CONVERTER
0CS(1-3)	CONVERTER REMOTE SWITCH
0C48R04L	SIDE 0, 48 VOLT RETURN
0DI(0-3)0	SIDE 0, PARITY BIT, BYTE (0-3)
0D(A,X,Y,Z)0	SIDE 0, HAMMING BIT A, X, Y, AND Z
0D(00-31)B1	SIDE 0, MEMORY DATA BIT (00-31), ACTIVE HIGH
0EXTRA4	SIDE 0, EXTRA NET
0GO(B-D)I1	SIDE 0, MEMORY GO LEAD (B-D), ACTIVE HIGH
0GSMEQ0	SIDE 0, GLOBAL SERVICE MODULE EQUIPPED
0INTC	SIDE 0, INTERLOCK CONVERTER
0INTR	SIDE 0, INTERLOCK RETURN
0MESEL(A-J)0	SIDE 0, MEMORY SELECT (A-J), ACTIVE LOW
0READI1	SIDE 0, MEMORY READ ENABLE
0REFI0	SIDE 0, MEMORY REFRESH
0SID4M(A,B)	SIDE 0, SEPARATE INSTRUCTION AND DATA, 4 MEGABYTE (A,B)
0SID4M0	SIDE 0, SEPARATE INSTRUCTION AND DATA, 4 MEGABYTE
0SID56(A,B)	SIDE 0, SEPARATE INSTRUCTION AND DATA, TN56, (A,B)
0SID560	SIDE 0, SEPARATE INSTRUCTION AND DATA, TN56
0TN281	SIDE 0, TN28 EQUIPPED, ACTIVE HIGH
0WB00	SIDE 0, BYTE WRITE ENABLE
0WH0	SIDE 0, HAMMING WRITE ENABLE
18MB0	SIDE 1, 8MBYTE MEMORY ARRAY INDICATOR
1ADPC00	SIDE 1, COLUMN ADDRESS PARITY
1ADPR00	SIDE 1, ROW ADDRESS PARITY
1A02IB	SIDE 1, MEMORY ADDRESS BIT 02B
1A02IB0	SIDE 1, MEMORY ADDRESS BIT 02B, ACTIVE LOW
1A02IB1	SIDE 1, MEMORY ADDRESS BIT 02B, ACTIVE HIGH
1A02I0	SIDE 1, MEMORY ADDRESS BIT 02, ACTIVE LOW
1A(03-21)I1	SIDE 1, MEMORY ADDRESS BIT 03 THROUGH 21, ACTIVE HIGH
1A19I0	SIDE 1, MEMORY ADDRESS BIT 19, ACTIVE LOW
1A22I1	SIDE 1, MEMORY ADDRESS BIT 22, ACTIVE HIGH
1BDI(0-3)0	SIDE 1, BUFFERED PARITY BIT, BYTE (0-3)
1BD(A,X,Y,Z)0	SIDE 1, BUFFERED HAMMING BITS A, X, Y, AND Z
1BD(00-31)B1	SIDE 1, BUFFERED MEMORY DATA BIT (00-31), ACTIVE HIGH
1C(+,-)CP04L	SIDE 1, CURRENT PROGRAM BUS
1CAL(M,MP)	SIDE 1, CONVERTER ALARM
1COOS(04L,48P)	SIDE 1, CONVERTER OUT OF SERVICE
1CSC04L	SIDE 1, CONVERTER SET POINT CONVERTER
1CS(1-3)	CONVERTER REMOTE SWITCH
1C48R04L	SIDE 1, 48 VOLT RETURN
1DI(0-3)0	SIDE 1, PARITY BIT, BYTE (0-3)
1D(A,X,Y,Z)0	SIDE 1, HAMMING BIT A, X, Y, AND Z
1D(00-31)B1	SIDE 1, MEMORY DATA BIT (00-31), ACTIVE HIGH
1EXTRA4	SIDE 1, EXTRA NET
1GO(B-D)I1	SIDE 1, MEMORY GO LEAD (B-D), ACTIVE HIGH
1GSMEQ0	SIDE 1, GLOBAL SERVICE MODULE EQUIPPED
1INTC	SIDE 1, INTERLOCK CONVERTER
1INTR	SIDE 1, INTERLOCK RETURN
1MESEL(A-J)0	SIDE 1, MEMORY SELECT (A-J), ACTIVE LOW
1READI1	SIDE 1, MEMORY READ ENABLE
1REFI0	SIDE 1, MEMORY REFRESH
1SID4M(A,B)	SIDE 1, SEPARATE INSTRUCTION AND DATA, 4 MEGABYTE (A,B)
1SID4M0	SIDE 1, SEPARATE INSTRUCTION AND DATA, 4 MEGABYTE
1SID56(A,B)	SIDE 1, SEPARATE INSTRUCTION AND DATA, TN56, (A,B)
1SID560	SIDE 1, SEPARATE INSTRUCTION AND DATA, TN56
1TN281	SIDE 1, TN28 EQUIPPED, ACTIVE HIGH
1WB00	SIDE 1, BYTE WRITE ENABLE
1WH0	SIDE 1, HAMMING WRITE ENABLE

Copyright (C) 1996 AT&T
All Rights Reserved

MEMORY EXPANSION UNIT

DWG SIZE C2 | ISSUE 8B

AT&T | SD-5D048-01 | SHEET A2

PRINTED IN U.S.A

DESIG	LOCATION			
	LOC	APP FIG	EQPT	OPT
TN28	04-022	3		(Z)
TN28	04-028	3		(Y)
TN28	04-034	3		(X)
TN28	04-046	3		(W)
TN28	04-052	3		(V)
TN28	05-058	3		(U)
TN28	04-064	3		(T)
SPARE	04-070	1		
SPARE	04-076	1		
TN1370	04-082	2		(ZC)
TN1370	04-100	2		(ZC)
SPARE	04-106	1		
SPARE	04-112	1		
TN28	04-118	3		(T)
TN28	04-124	3		(U)
TN28	04-130	3		(V)
TN28	04-136	3		(W)
TN28	04-148	3		(X)
TN28	04-154	3		(Y)
TN28	04-160	3		(Z)
TN56	04-022	3		(P)
TN56	04-028	3		(N)
TN56	04-034	3		(M)
TN56	04-046	3		(G)
TN56	04-052	3		(F)
TN56	05-058	3		(E)
TN56	04-064	3		(D)
TN56	04-118	3		(D)
TN56	04-124	3		(E)
TN56	04-130	3		(F)
TN56	04-136	3		(G)
TN56	04-148	3		(M)
TN56	04-154	3		(N)
TN56	04-160	3		(P)
TN2012	04-022	3		(B)
TN2012	04-028	3		(A)
TN2012	04-034	3		(ZA)
TN2012	04-148	3		(ZA)
TN2012	04-154	3		(A)
TN2012	04-160	3		(B)
495FB	04-016	2		
495FB	04-178	2		
TN1419	04-058	5		(ZH)
TN1419	04-064	5		(ZH)
TN1419	04-124	5		(ZH)
TN1419	04-118	5		(ZH)
TN1409	04-046	6		(ZL,ZM,ZT)
TN1409	04-052	6		(ZL,ZM,ZT)
TN1409	04-130	6		(ZL,ZM,ZT)
TN1409	04-136	6		(ZL,ZM,ZT)

DESIG	LOCATION			
	LOC	APP FIG	EQPT	OPT
6122-111-09320	04-082-332			(ZK)
6122-111-09330	04-082-313			(ZK)
6122-111-09330	04-082-113			(ZK)
6122-111-09320	04-100-332			(ZK)
6122-111-09330	04-100-313			(ZK)
6122-111-09330	04-100-113			(ZK)

Copyright (C) 1996 AT&T
All Rights Reserved

MEMORY EXPANSION UNIT

DWG SIZE: C2
ISSUE: 9B

AT&T
SD-5D048-01
SHEET: A3

PRINTED IN U.S.A

PART OF FS 1

MEMORY EXPANSION, SIDE 0
POWER CONVERTER

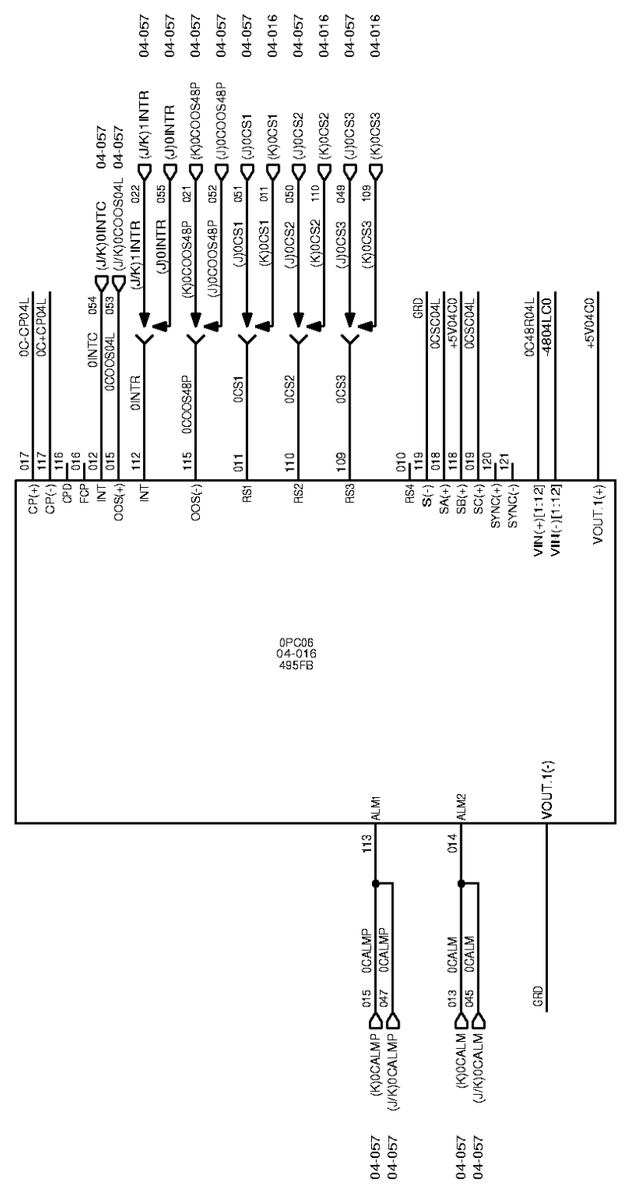

Copyright (C) 1996 AT&T
All Rights Reserved

MEMORY EXPANSION UNIT

DWG SIZE	ISSUE
C2	8B

AT&T	SD-5D048-01	SHEET
		B1

PRINTED IN U.S.A

PART OF FS 1

MEMORY EXPANSION, SIDE 0
MAIN STORE MEMORY ARRAY

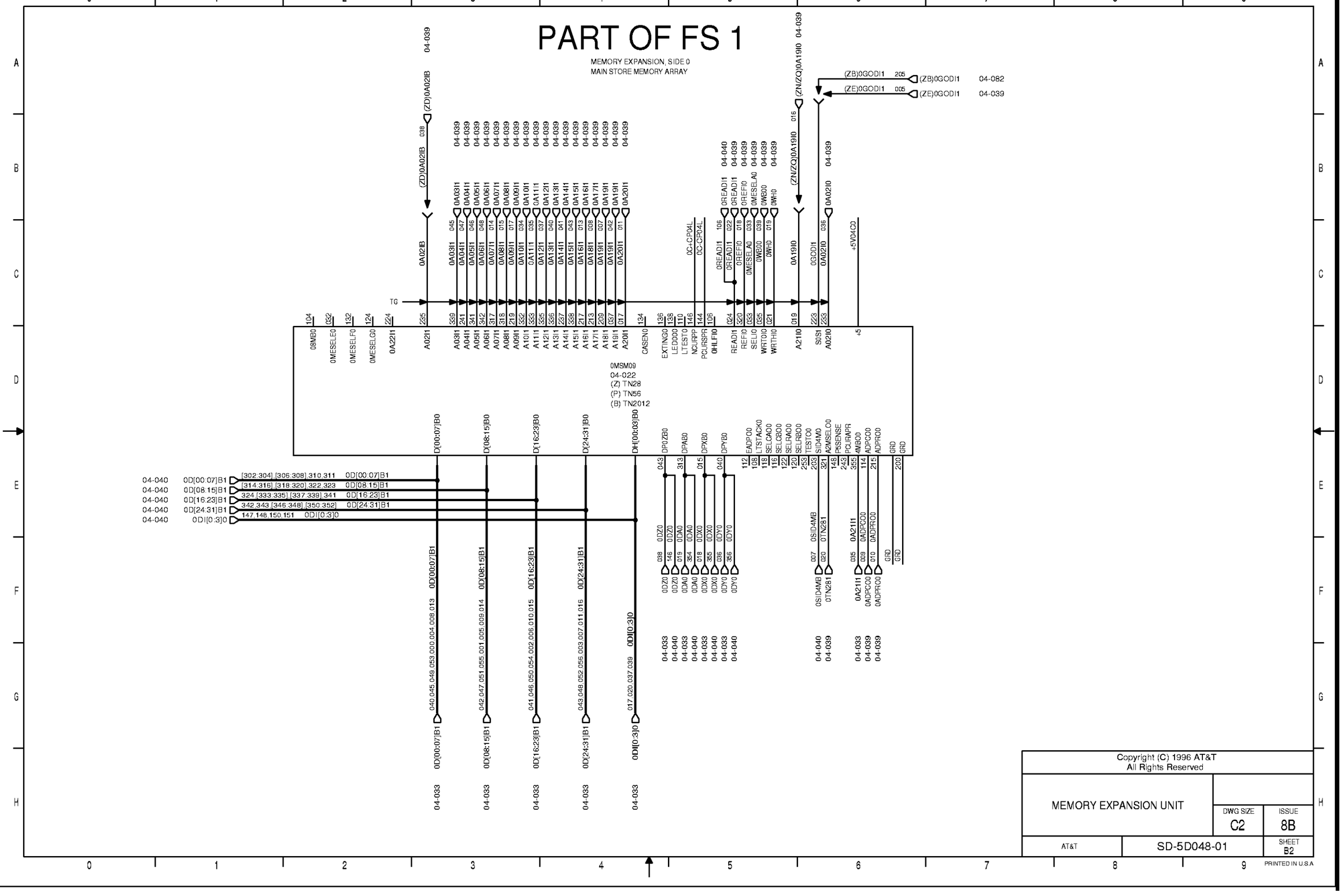

Copyright (C) 1996 AT&T
All Rights Reserved

MEMORY EXPANSION UNIT

DWG SIZE	ISSUE
C2	8B

AT&T	SD-5D048-01	SHEET
		B2

PRINTED IN U.S.A

PART OF FS 1

MEMORY EXPANSION, SIDE 0
MAIN STORE MEMORY ARRAY
DATA SIGNAL, SIDE 0

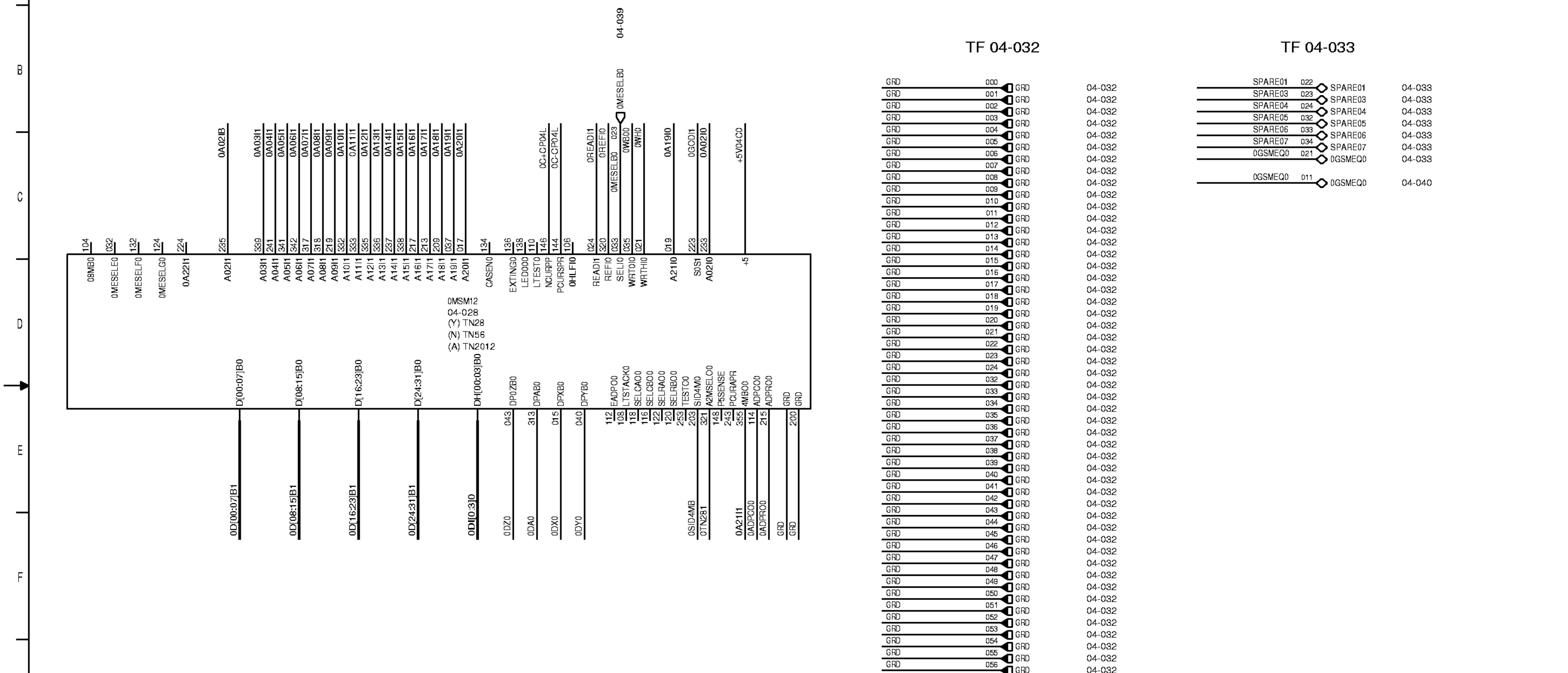

Copyright (C) 1996 AT&T
All Rights Reserved

MEMORY EXPANSION UNIT		DWG SIZE C2	ISSUE 8B
AT&T	SD-5D048-01		SHEET B3

PRINTED IN U.S.A

PART OF FS 1

MEMORY EXPANSION, SIDE 0
MAIN STORE MEMORY ARRAY
ADDRESS AND CONTROL, SIDE 0

0MSM15
04-034
(X) TN28
(M) TN56
(ZA) TN2012

08MB0 104
0MESELE0 032
0MESELF0 132
0MESELG0 124
0A221I 224
A021I 225 0A021B
A03I 339 0A03I1
A04I 241 0A04I1
A05I 341 0A05I1
A06I 342 0A06I1
A07I 317 0A07I1
A08I 318 0A08I1
A09I 219 0A09I1
A10I 332 0A10I1
A11I 333 0A11I1
A12I 335 0A12I1
A13I 336 0A13I1
A14I 237 0A14I1
A15I 338 0A15I1
A16I 217 0A16I1
A17I 213 0A17I1
A18I 209 0A18I1
A19I 037 0A19I1
A20I 017 0A20I1
CASEN0 134
EXTINGO 136
LEDOOO 138
LTEST0 110
NCURPP 145
POURSPR 144
0HLF1O 106
0C-CP04L
0C-CP04L
0READ1I 024
0REFI0 320
0MESELC0 033 04-039
SELI0 035 0MESELC0
WRTOI0 021 0WB00
WRTHI0 0WH0
A2110 019 0A19I0
S0S1 223 0GOD1I
A0210 233 0A02I0
+5 +5V04C0

D[00:07]B0
D[08:15]B0
D[16:23]B0
D[24:31]B0
DH[00:03]B0
DP0ZB0 043
DPAB0 313
DPXB0 015
DPYB0 040
EADPO0 112
LTSTACK0 108
SELGAO0 118
SELGBO0 116
SELRAO0 122
SELRBO0 120
TESTO0 253
SIDAM0 203
A2MSELO0 321
P6SENSE 148
PCURAPR 243
4MBO0 355
ADPCO0 114
ADPRO0 215
GRD 200
GRD

0D[00:07]B1
0D[08:15]B1
0D[16:23]B1
0D[24:31]B1
0DI[0:3]0
0DZ0
0DA0
0DX0
0DY0
0SID4M0 028
0SID4M0 000
0TN281
0SID4M0
0SID4M0
0A2111
0ADPC00
0ADPR00
GRD
GRD

04-040
04-039

TF 04-038

GRD	000	GRD		04-038
GRD	001	GRD		04-038
GRD	002	GRD		04-038
GRD	003	GRD		04-038
GRD	004	GRD		04-038
GRD	005	GRD		04-038
GRD	006	GRD		04-038
GRD	007	GRD		04-038
GRD	008	GRD		04-038
GRD	009	GRD		04-038
GRD	010	GRD		04-038
GRD	011	GRD		04-038
GRD	012	GRD		04-038
GRD	013	GRD		04-038
GRD	014	GRD		04-038
GRD	015	GRD		04-038
GRD	016	GRD		04-038
GRD	017	GRD		04-038
GRD	018	GRD		04-038
GRD	019	GRD		04-038
GRD	020	GRD		04-038
GRD	021	GRD		04-038
GRD	022	GRD		04-038
GRD	023	GRD		04-038
GRD	024	GRD		04-038
GRD	032	GRD		04-038
GRD	033	GRD		04-038
GRD	034	GRD		04-038
GRD	035	GRD		04-038
GRD	036	GRD		04-038
GRD	037	GRD		04-038
GRD	038	GRD		04-038
GRD	039	GRD		04-038
GRD	040	GRD		04-038
GRD	041	GRD		04-038
GRD	042	GRD		04-038
GRD	043	GRD		04-038
GRD	044	GRD		04-038
GRD	045	GRD		04-038
GRD	046	GRD		04-038
GRD	047	GRD		04-038
GRD	048	GRD		04-038
GRD	049	GRD		04-038
GRD	050	GRD		04-038
GRD	051	GRD		04-038
GRD	052	GRD		04-038
GRD	053	GRD		04-038
GRD	054	GRD		04-038
GRD	055	GRD		04-038
GRD	056	GRD		04-038
GRD	006	GRD		04-039
0SID560	002	0SID560		04-039
0SID560	004	0SID560		04-040

TF 04-040

+5V04C0	000	+5V04C0	04-040
+5V04C0	001	+5V04C0	04-040
+5V04C0	100	+5V04C0	04-040
+5V04C0	101	+5V04C0	04-040
GRD	005	GRD	04-040
GRD	009	GRD	04-040
GRD	013	GRD	04-040
GRD	016	GRD	04-040
GRD	017	GRD	04-040
GRD	021	GRD	04-040
GRD	032	GRD	04-040
GRD	035	GRD	04-040
GRD	036	GRD	04-040
GRD	040	GRD	04-040
GRD	045	GRD	04-040
GRD	049	GRD	04-040
GRD	053	GRD	04-040
GRD	105	GRD	04-040
GRD	107	GRD	04-040
GRD	109	GRD	04-040
GRD	113	GRD	04-040
GRD	117	GRD	04-040
GRD	119	GRD	04-040
GRD	121	GRD	04-040
GRD	132	GRD	04-040
GRD	136	GRD	04-040
GRD	138	GRD	04-040
GRD	140	GRD	04-040
GRD	145	GRD	04-040
GRD	149	GRD	04-040
GRD	152	GRD	04-040
GRD	153	GRD	04-040
GRD	200	GRD	04-040
GRD	201	GRD	04-040
GRD	205	GRD	04-040
GRD	209	GRD	04-040
GRD	213	GRD	04-040
GRD	217	GRD	04-040
GRD	221	GRD	04-040
GRD	232	GRD	04-040
GRD	236	GRD	04-040
GRD	240	GRD	04-040
GRD	245	GRD	04-040
GRD	248	GRD	04-040
GRD	253	GRD	04-040
GRD	300	GRD	04-040
GRD	301	GRD	04-040
GRD	305	GRD	04-040
GRD	309	GRD	04-040
GRD	313	GRD	04-040
GRD	317	GRD	04-040
GRD	321	GRD	04-040
GRD	332	GRD	04-040
GRD	336	GRD	04-040
GRD	340	GRD	04-040
GRD	344	GRD	04-040
GRD	345	GRD	04-040
GRD	348	GRD	04-040
GRD	353	GRD	04-040

Copyright (C) 1996 AT&T
All Rights Reserved

MEMORY EXPANSION UNIT

DWG SIZE	ISSUE
C2	8B

AT&T	SD-5D048-01	SHEET
		B4

PRINTED IN U.S.A

PART OF FS 1

MEMORY EXPANSION, SIDE 0
MAIN STORE MEMORY ARRAY

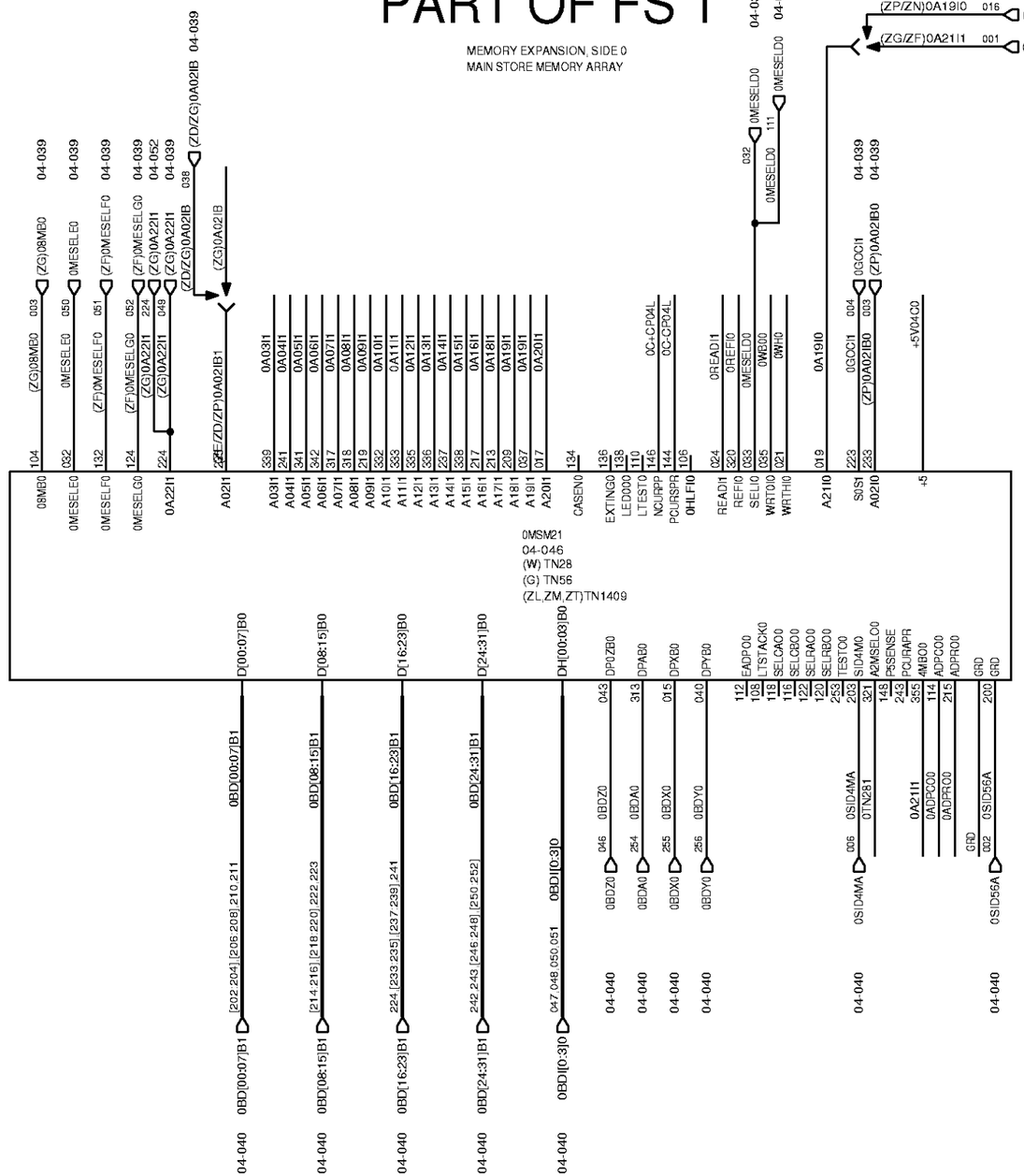

Copyright (C) 1996 AT&T
All Rights Reserved

MEMORY EXPANSION UNIT		DWG SIZE C2	ISSUE 9B
AT&T	SD-5D048-01		SHEET B5

PRINTED IN U.S.A

PART OF FS 1

MEMORY EXPANSION, SIDE 0
MAIN STORE MEMORY ARRAY
ALARM SIGNAL, SIDE 0

0MSM24
04-052
(V) TN28
(F) TN56
(ZL,ZM,ZT)TN1409

TF 04-056

GRD	000	GRD		04-056
GRD	001	GRD		04-056
GRD	002	GRD		04-056
GRD	003	GRD		04-056
GRD	004	GRD		04-056
GRD	005	GRD		04-056
GRD	006	GRD		04-056
GRD	007	GRD		04-056
GRD	008	GRD		04-056
GRD	009	GRD		04-056
GRD	010	GRD		04-056
GRD	011	GRD		04-056
GRD	012	GRD		04-056
GRD	013	(K)GRD		04-056
GRD	014	GRD		04-056
GRD	015	(K)GRD		04-056
GRD	016	GRD		04-056
GRD	017	GRD		04-056
GRD	018	GRD		04-056
GRD	019	GRD		04-056
GRD	020	GRD		04-056
GRD	021	GRD		04-056
GRD	022	(K)GRD		04-056
GRD	023	(K)GRD		04-056
GRD	024	GRD		04-056
GRD	032	GRD		04-056
GRD	033	GRD		04-056
GRD	034	GRD		04-056
GRD	035	GRD		04-056
GRD	036	GRD		04-056
GRD	037	GRD		04-056
GRD	038	GRD		04-056
GRD	039	GRD		04-056
GRD	040	GRD		04-056
GRD	041	GRD		04-056
GRD	042	GRD		04-056
GRD	043	GRD		04-056
GRD	044	GRD		04-056
GRD	045	(J,K)GRD		04-056
GRD	046	(J)GRD		04-056
GRD	047	(J,K)GRD		04-056
GRD	048	(J)GRD		04-056
GRD	049	(J)GRD		04-056
GRD	050	(J)GRD		04-056
GRD	051	(J)GRD		04-056
GRD	052	(J)GRD		04-056
GRD	053	(J)GRD		04-056
GRD	054	(J,K)GRD		04-056
GRD	055	(J,K)GRD		04-056
GRD	056	(J)GRD		04-056

TF 04-057

SPARE22	046	(J)SPARE22	04-057
SPARE23	048	(J)SPARE23	04-057
SPARE24	056	(J)SPARE24	04-057

Copyright (C) 1996 AT&T
All Rights Reserved

MEMORY EXPANSION UNIT

DWG SIZE	ISSUE
C2	9B

AT&T | SD-5D048-01 | SHEET B6

PRINTED IN U.S.A

PART OF FS 1

MEMORY EXPANSION, SIDE 0
MAIN STORE MEMORY ARRAY

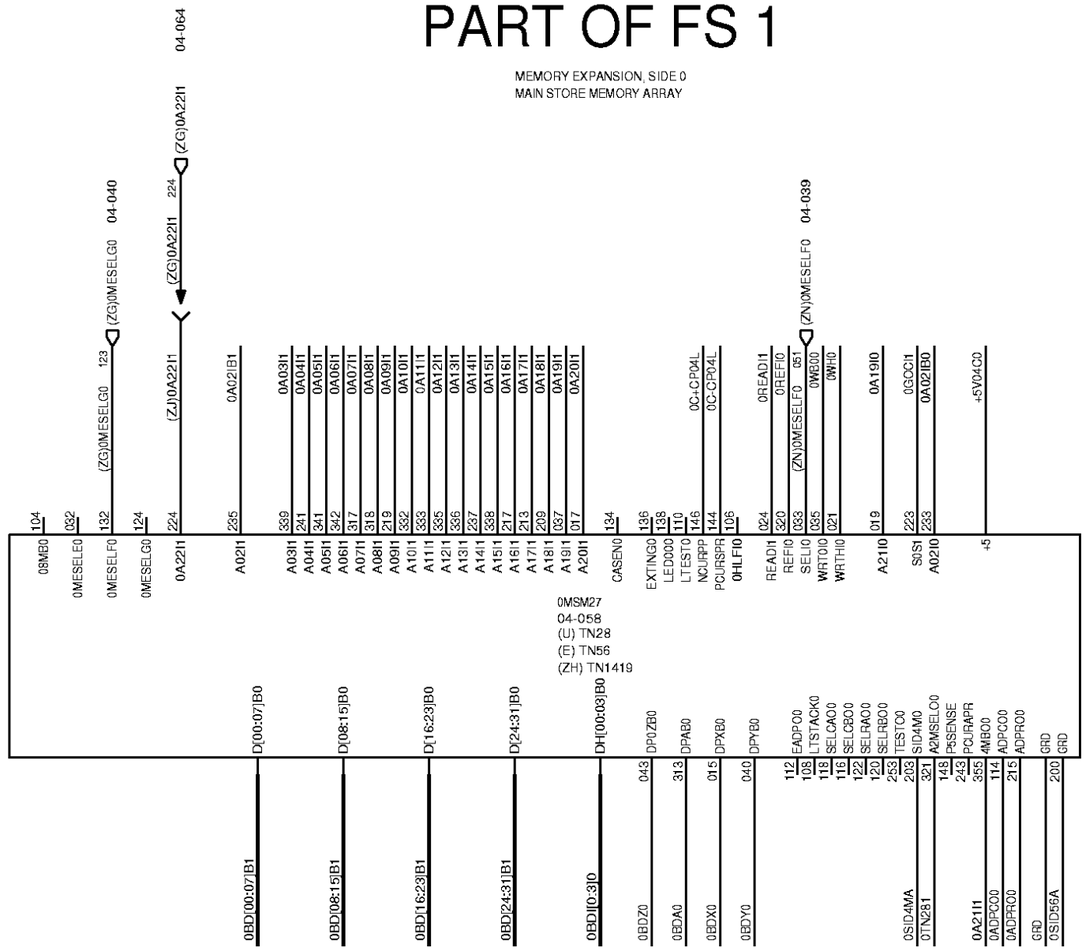

Copyright (C) 1996 AT&T
All Rights Reserved

MEMORY EXPANSION UNIT

DWG SIZE	ISSUE
C2	8B

AT&T	SD-5D048-01	SHEET
		B7

PRINTED IN U.S.A

PART OF FS 1

MEMORY EXPANSION, SIDE 0
MAIN STORE MEMORY ARRAY

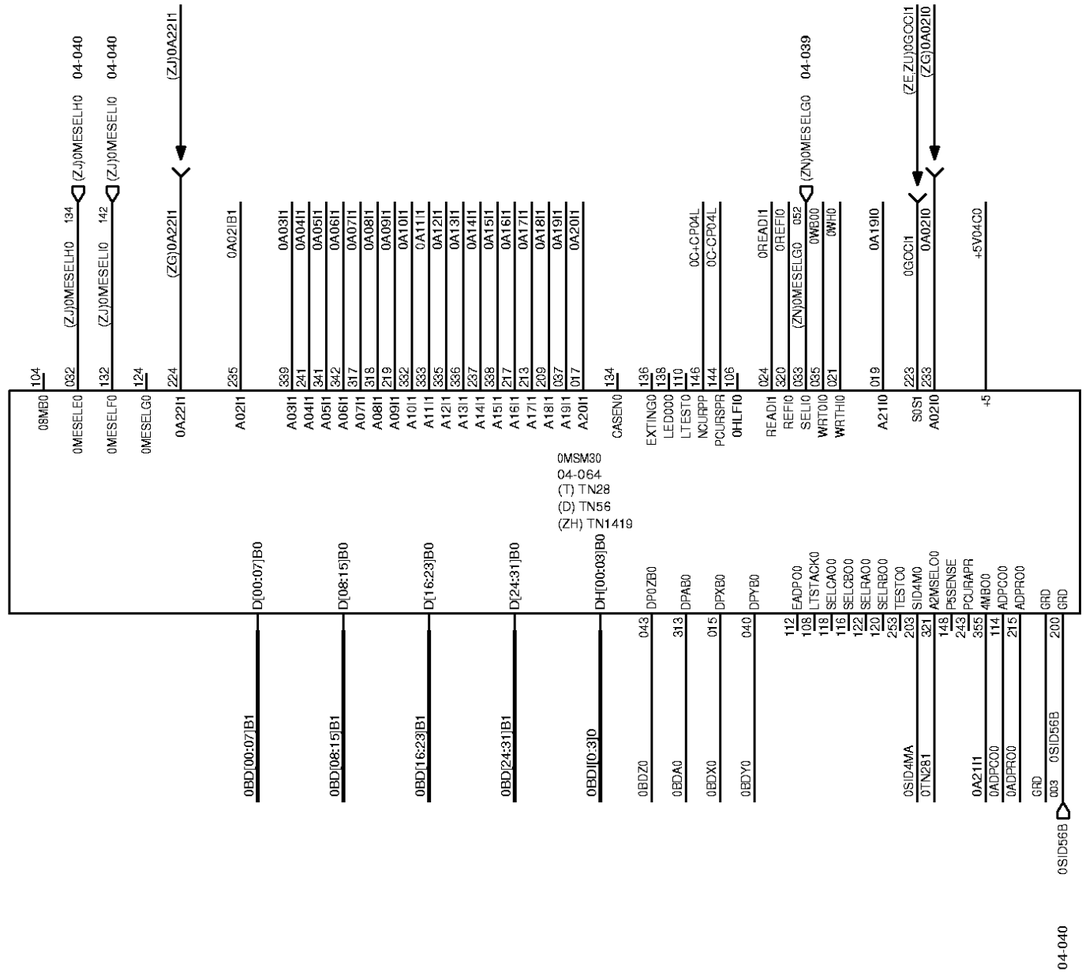

Copyright (C) 1996 AT&T
All Rights Reserved

MEMORY EXPANSION UNIT

DWG SIZE	ISSUE
C2	9B

AT&T	SD-5D048-01	SHEET
		B8

PRINTED IN U.S.A

PART OF FS 1

MEMORY EXPANSION, SIDE 0
MAIN STORE MEMORY ARRAY

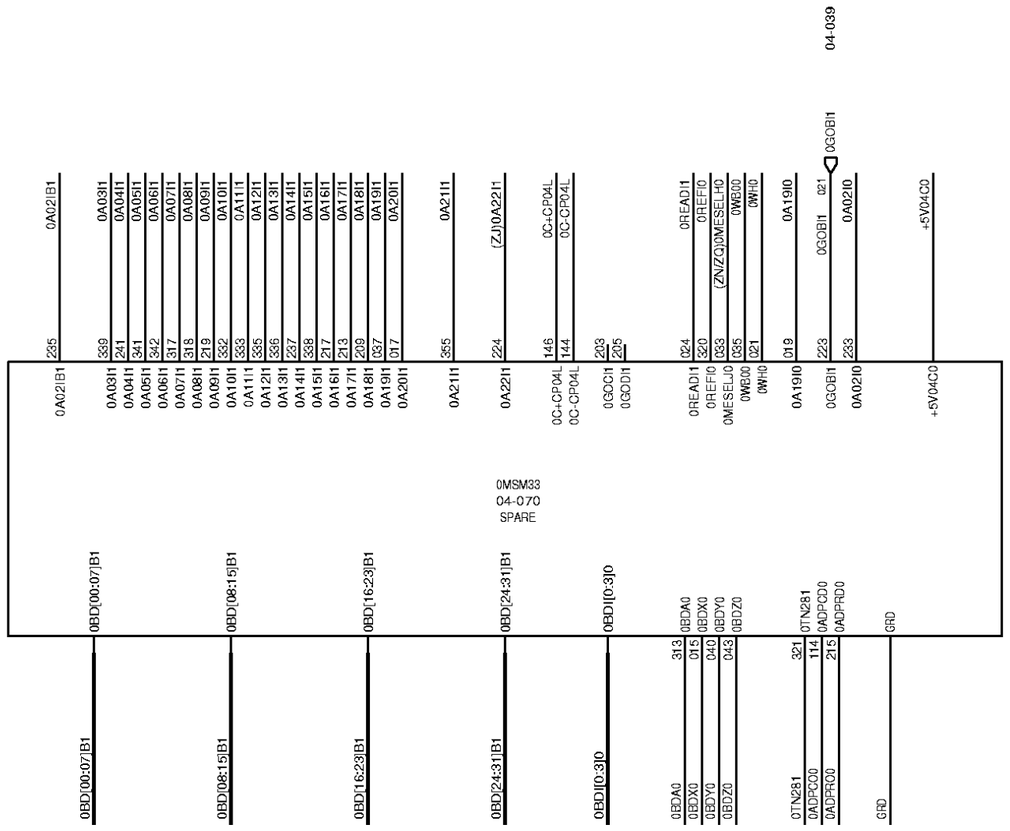

Copyright (C) 1996 AT&T
All Rights Reserved

MEMORY EXPANSION UNIT		DWG SIZE C2	ISSUE 8B
AT&T	SD-5D048-01		SHEET B9

PRINTED IN U.S.A

PART OF FS 1

MEMORY EXPANSION, SIDE 0
MAIN STORE MEMORY ARRAY

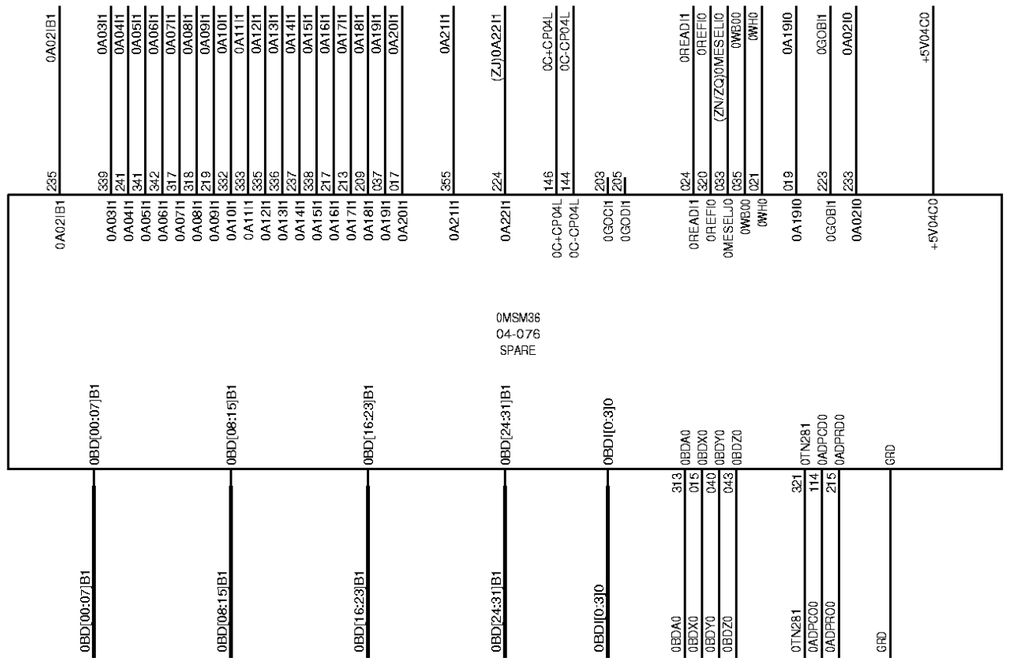

Copyright (C) 1996 AT&T
All Rights Reserved

MEMORY EXPANSION UNIT		DWG SIZE C2	ISSUE 8B
AT&T	SD-5D048-01		SHEET B10

PRINTED IN U.S.A

PART OF FS 1

MEMORY EXPANSION, SIDE 0
MAIN STORE MEMORY ARRAY

0MSM39
04-082
Z(ZC) TN1370
(ZK) BERG

TF 04-088

+5V04C0	000	+5V04C0	04-088
+5V04C0	001	+5V04C0	04-088
+5V04C0	100	+5V04C0	04-088
+5V04C0	101	+5V04C0	04-088
GRD	004	GRD	04-088
GRD	013	GRD	04-088
GRD	014	GRD	04-088
GRD	024	GRD	04-088
GRD	032	GRD	04-088
GRD	045	GRD	04-088
GRD	107	GRD	04-088
GRD	113	GRD	04-088
GRD	114	GRD	04-088
GRD	124	GRD	04-088
GRD	200	GRD	04-088
GRD	201	GRD	04-088
GRD	210	GRD	04-088
GRD	213	GRD	04-088
GRD	214	GRD	04-088
GRD	224	GRD	04-088
GRD	232	GRD	04-088
GRD	245	GRD	04-088
GRD	300	GRD	04-088
GRD	301	GRD	04-088
GRD	313	GRD	04-088
GRD	314	GRD	04-088
GRD	324	GRD	04-088

Copyright (C) 1996 AT&T
All Rights Reserved

MEMORY EXPANSION UNIT

DWG SIZE: C2
ISSUE: 9B
AT&T
SD-5D048-01
SHEET: B11
PRINTED IN U.S.A

PART OF FS 1

MEMORY EXPANSION, SIDE 0

POWER AND GROUND LUGS

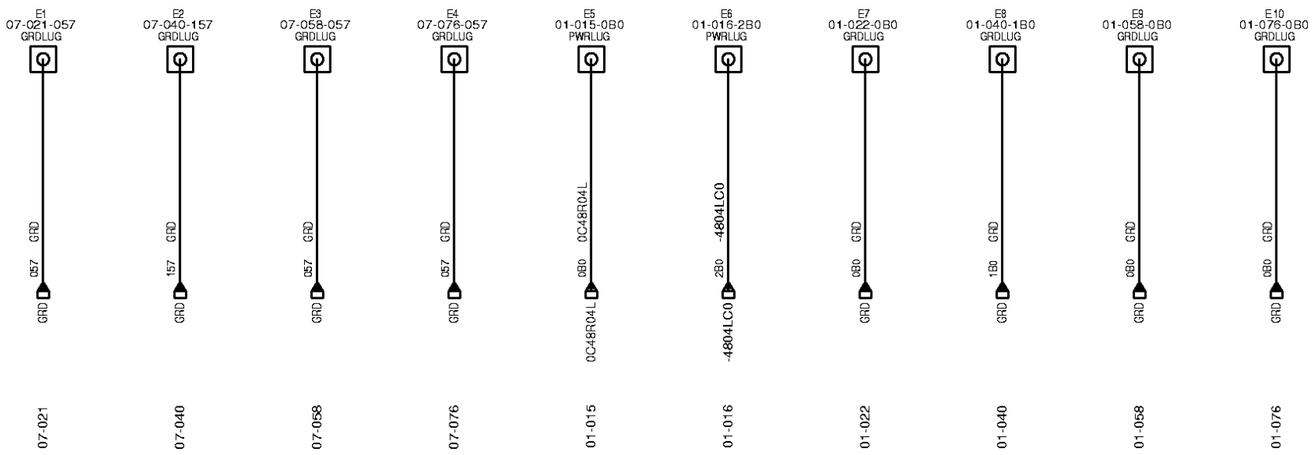

Copyright (C) 1996 AT&T
All Rights Reserved

MEMORY EXPANSION UNIT

DWG SIZE C2

ISSUE 8B

AT&T

SD-5D048-01

SHEET B12

PRINTED IN U.S.A

PART OF FS 2

MEMORY EXPANSION, SIDE 1
MAIN STORE MEMORY ARRAY

1MSM48
04-100
Z(ZC) TN1370
(ZK) BERG

TF 04-094

Copyright (C) 1996 AT&T
All Rights Reserved

MEMORY EXPANSION UNIT

DWG SIZE	ISSUE
C2	9B

AT&T	SD-5D048-01	SHEET
		B13

PRINTED IN U.S.A

PART OF FS 2

MEMORY EXPANSION, SIDE 1
MAIN STORE MEMORY ARRAY

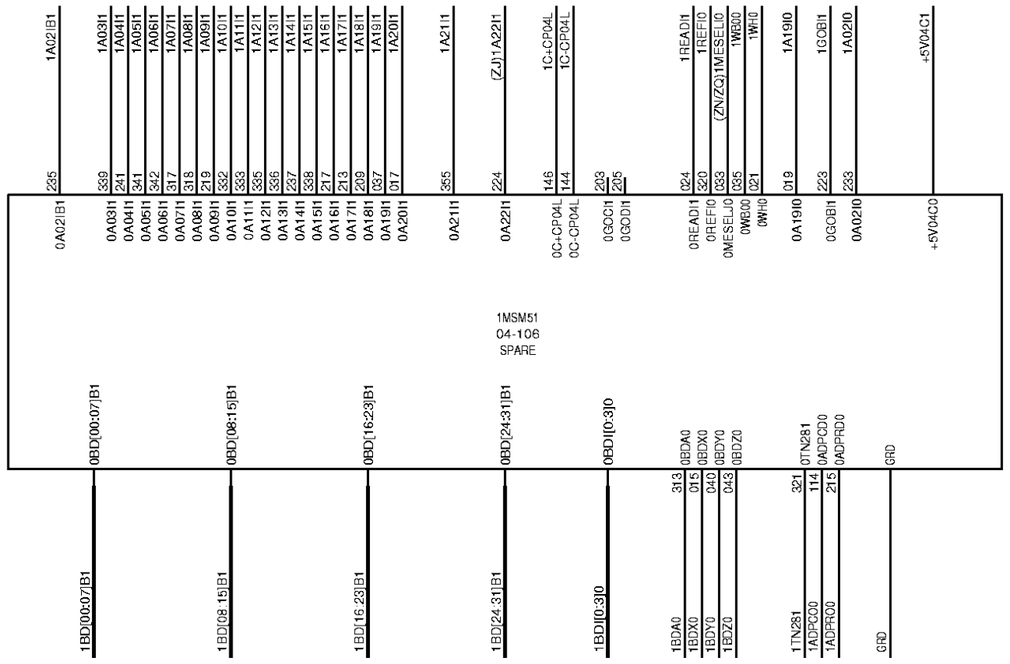

Copyright (C) 1996 AT&T
All Rights Reserved

MEMORY EXPANSION UNIT		DWG SIZE C2	ISSUE 8B
AT&T	SD-5D048-01		SHEET B14

PRINTED IN U.S.A

PART OF FS 2

MEMORY EXPANSION, SIDE 1
MAIN STORE MEMORY ARRAY

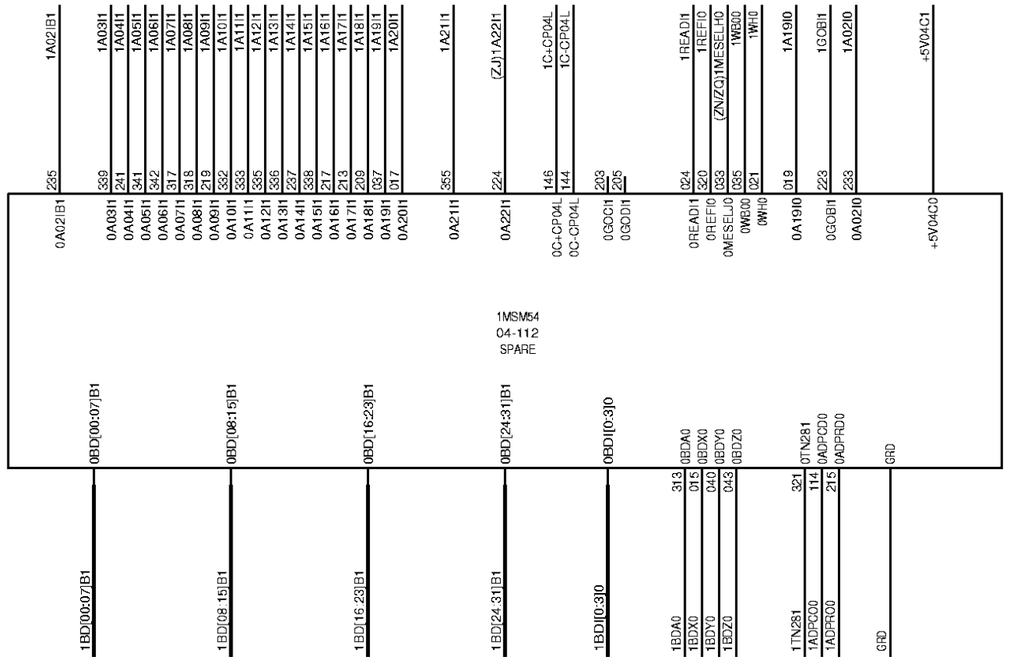

Copyright (C) 1996 AT&T
All Rights Reserved

MEMORY EXPANSION UNIT

DWG SIZE	ISSUE
C2	8B

AT&T	SD-5D048-01	SHEET
		B15

PRINTED IN U.S.A

PART OF FS 2

MEMORY EXPANSION, SIDE 1
MAIN STORE MEMORY ARRAY

1MSM57
04-118
(T) TN28
(D) TN56
(ZH) TN1419

(ZJ/ZQ)1MESELH0
(ZB)1GCCI1
(ZE)1GCCI1
(ZG/ZP)1A02I0
04-147

08MB0 104
0MESELE0 052
0MESELF0 132 (ZJ)1MSELI0
0MESELG0 124
0A2211 224 (ZJ)1A22I1
A02I1 235 1A02IB1
A03I1 339 1A03I1
A04I1 241 1A04I1
A05I1 341 1A05I1
A06I1 342 1A06I1
A07I1 317 1A07I1
A08I1 318 1A08I1
A09I1 219 1A09I1
A10I1 332 1A10I1
A11I1 333 1A11I1
A12I1 335 1A12I1
A13I1 336 1A13I1
A14I1 237 1A14I1
A15I1 338 1A15I1
A16I1 217 1A16I1
A17I1 213 1A17I1
A18I1 209 1A18I1
A19I1 037 1A19I1
A20I1 017 1A20I1
CASEN0 134
EXTING0 136
LED000 138
LTEST0 110
NCURPP 146 1C-CP04L
PCURSPR 144 1C-CP04L
0HLFI0 106
READI1 024 1READI1
REFI0 020 1REFI0
SELI0 033 (ZN)1MESELG0
WRT0I0 035 1WE00
WRTHI0 021 1WH0
A2110 019 1A19I0
S0S1 223 1GCCI1
A0210 233 1A02I0
+5 +5V04C1

D[00:07]B0 1BD[00:07]B1
D[08:15]B0 1BD[08:15]B1
D[16:23]B0 1BD[16:23]B1
D[24:31]B0 1BD[24:31]B1
DH[00:03]B0 1BDI[0:3]0
DP0ZB0 043 1BDZ0
DPAB0 313 1BDA0
DPXB0 015 1BDX0
DPYB0 040 1BDY0
EADP00 112
LTSTACK0 108
SELCA00 119
SELCB00 116
SELRA00 122
SELRB00 120
TEST00 253
SID4M0 203
A2MSELC0 321
PSSENSE 148
POURAPR 243
4MB00 355
ADPC00 114 1A21I1
ADPR00 215 1ADPC00
GRD 1ADPR00
GRD 003 1SID56B
GRD 200 GRD
1SID56B 04-142

Copyright (C) 1996 AT&T
All Rights Reserved

MEMORY EXPANSION UNIT

DWG SIZE	ISSUE
C2	8B

AT&T	SD-5D048-01	SHEET
		B16

PRINTED IN U.S.A

PART OF FS 2

MEMORY EXPANSION, SIDE 1
MAIN STORE MEMORY ARRAY

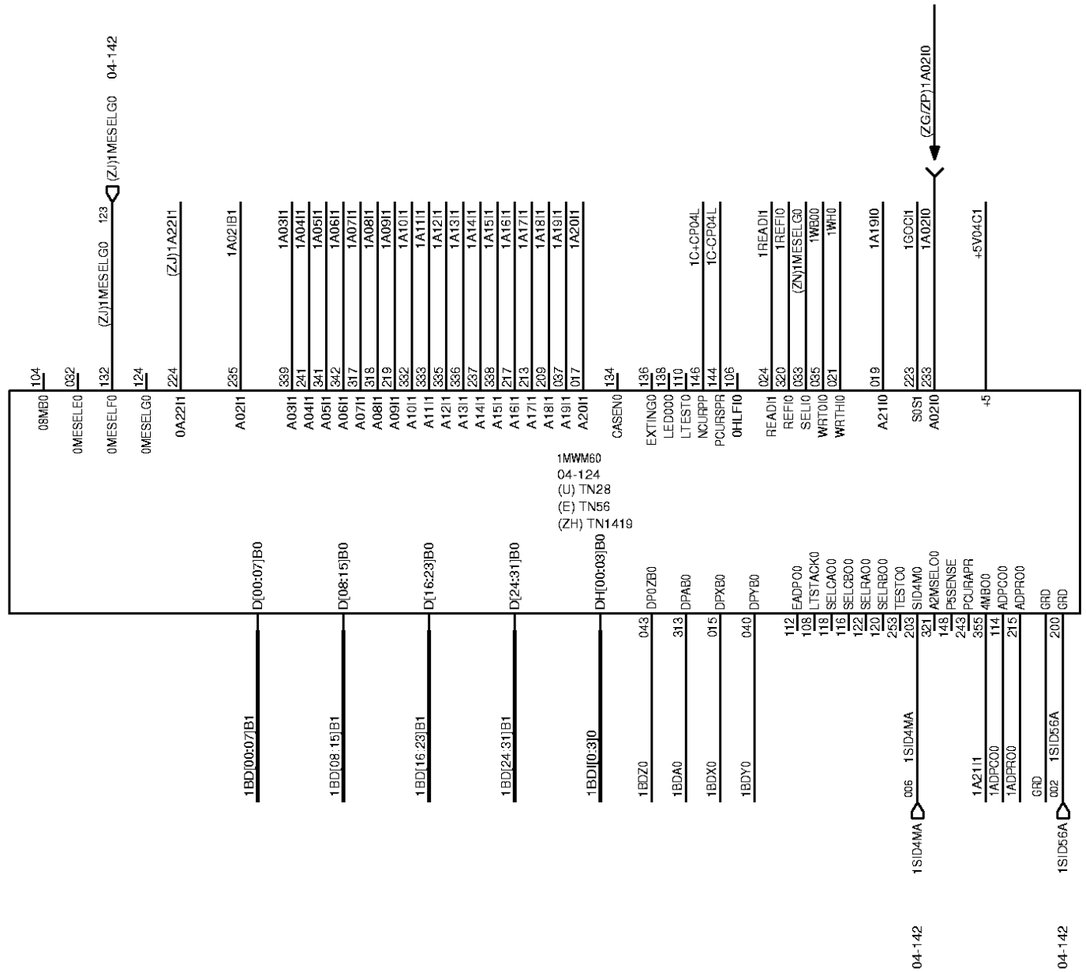

Copyright (C) 1996 AT&T
All Rights Reserved

MEMORY EXPANSION UNIT

DWG SIZE	ISSUE
C2	8B

AT&T	SD-5D048-01	SHEET
		B17

PRINTED IN U.S.A

PART OF FS 2

MEMORY EXPANSION, SIDE 1
MAIN STORE MEMORY ARRAY

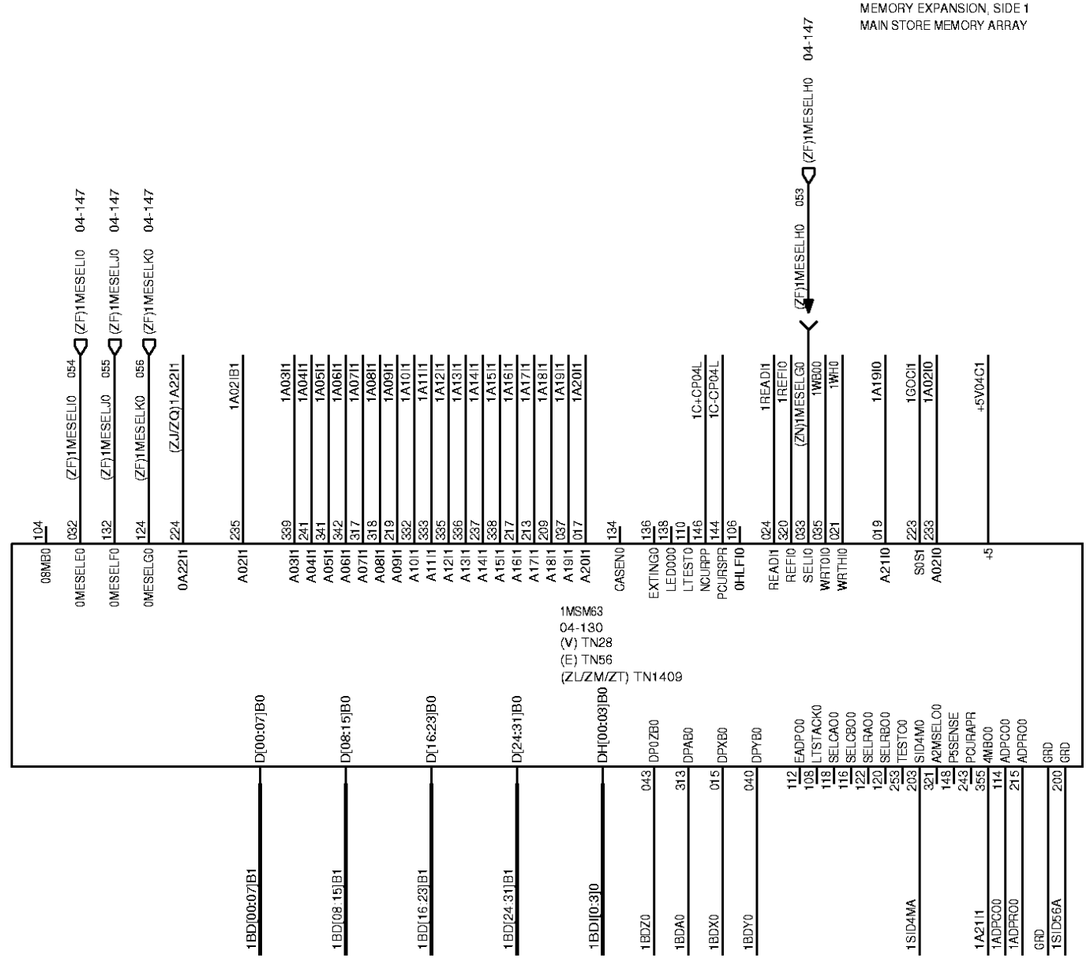

TF 04-134

GRD	000	GRD		04-134
GRD	001	GRD		04-134
GRD	002	GRD		04-134
GRD	003	GRD		04-134
GRD	004	GRD		04-134
GRD	005	GRD		04-134
GRD	006	GRD		04-134
GRD	007	GRD		04-134
GRD	008	GRD		04-134
GRD	009	GRD		04-134
GRD	010	GRD		04-134
GRD	011	GRD		04-134
GRD	012	GRD		04-134
GRD	013	(K)GRD		04-134
GRD	014	GRD		04-134
GRD	015	(K)GRD		04-134
GRD	016	GRD		04-134
GRD	017	GRD		04-134
GRD	018	GRD		04-134
GRD	019	GRD		04-134
GRD	020	GRD		04-134
GRD	021	(K)GRD		04-134
GRD	022	(K)GRD		04-134
GRD	023	GRD		04-134
GRD	024	GRD		04-134
GRD	032	GRD		04-134
GRD	033	GRD		04-134
GRD	034	GRD		04-134
GRD	035	GRD		04-134
GRD	036	GRD		04-134
GRD	037	GRD		04-134
GRD	038	GRD		04-134
GRD	039	GRD		04-134
GRD	040	GRD		04-134
GRD	041	GRD		04-134
GRD	042	GRD		04-134
GRD	043	GRD		04-134
GRD	044	GRD		04-134
GRD	045	(J/K)GRD		04-134
GRD	046	(J)GRD		04-134
GRD	047	(J/K)GRD		04-134
GRD	048	(J)GRD		04-134
GRD	049	(J)GRD		04-134
GRD	050	(J)GRD		04-134
GRD	051	(J)GRD		04-134
GRD	052	(J)GRD		04-134
GRD	053	(J/K)GRD		04-134
GRD	054	(J/K)GRD		04-134
GRD	055	(J)GRD		04-134
GRD	056	(J)GRD		04-134

TF 04-135

SPARE25	046	(J)SPARE25	04-135
SPARE26	048	(J)SPARE26	04-135
SPARE27	056	(J)SPARE27	04-135

Copyright (C) 1996 AT&T
All Rights Reserved

MEMORY EXPANSION UNIT

DWG SIZE	ISSUE
C2	9B

AT&T	SD-5D048-01	SHEET
		B18

PRINTED IN U.S.A

PART OF FS 2

MEMORY EXPANSION, SIDE 1
MAIN STORE MEMORY ARRAY
ALARM SIGNAL, SIDE 1

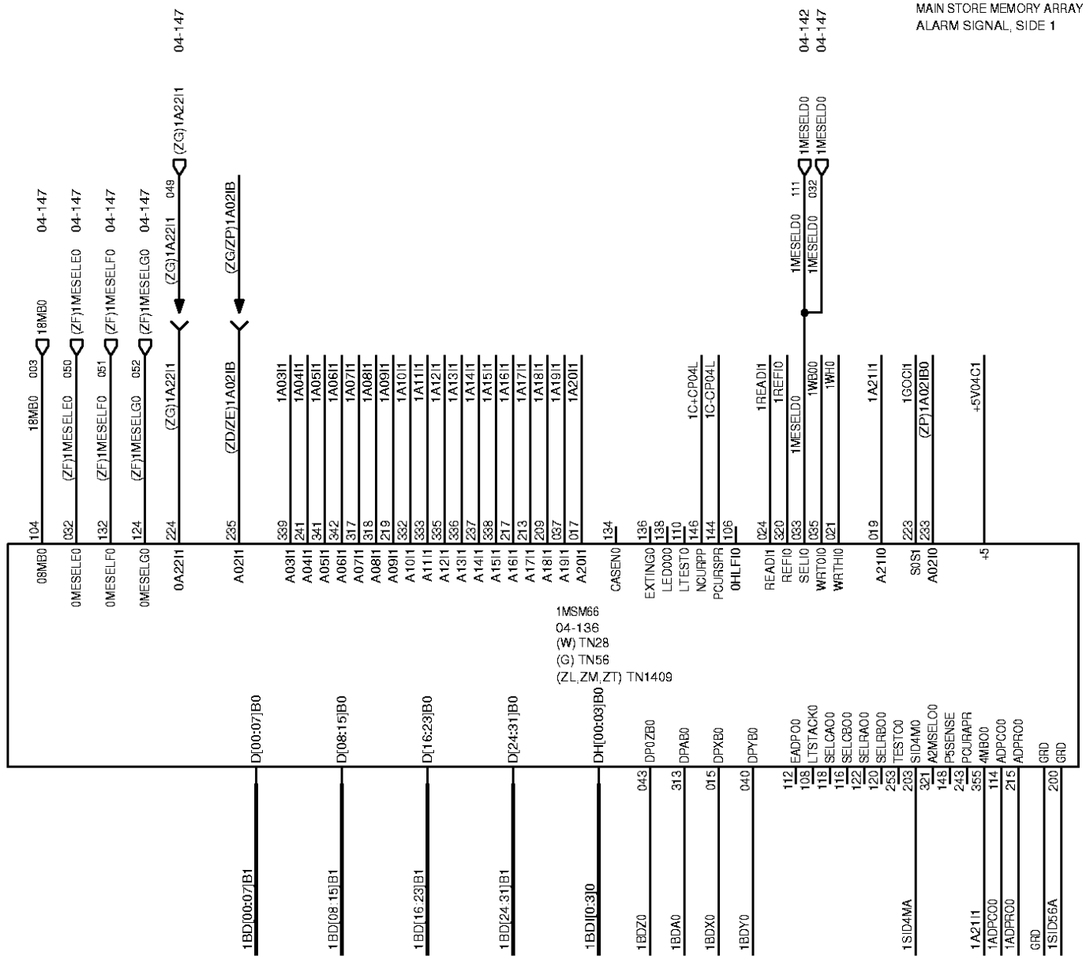

TF 04-142

+5V04C1	000	+5V04C1		04-142
+5V04C1	001	+5V04C1		04-142
+5V04C1	100	+5V04C1		04-142
+5V04C1	101	+5V04C1		04-142
GRD	005	GRD		04-142
GRD	009	GRD		04-142
GRD	013	GRD		04-142
GRD	016	GRD		04-142
GRD	021	GRD		04-142
GRD	032	GRD		04-142
GRD	035	GRD		04-142
GRD	036	GRD		04-142
GRD	040	GRD		04-142
GRD	045	GRD		04-142
GRD	049	GRD		04-142
GRD	053	GRD		04-142
GRD	105	GRD		04-142
GRD	107	GRD		04-142
GRD	109	GRD		04-142
GRD	113	GRD		04-142
GRD	117	GRD		04-142
GRD	119	GRD		04-142
GRD	121	GRD		04-142
GRD	132	GRD		04-142
GRD	136	GRD		04-142
GRD	138	GRD		04-142
GRD	140	GRD		04-142
GRD	145	GRD		04-142
GRD	149	GRD		04-142
GRD	152	GRD		04-142
GRD	153	GRD		04-142
GRD	200	GRD		04-142
GRD	201	GRD		04-142
GRD	205	GRD		04-142
GRD	209	GRD		04-142
GRD	213	GRD		04-142
GRD	217	GRD		04-142
GRD	221	GRD		04-142
GRD	232	GRD		04-142
GRD	236	GRD		04-142
GRD	240	GRD		04-142
GRD	245	GRD		04-142
GRD	249	GRD		04-142
GRD	253	GRD		04-142
GRD	300	GRD		04-142
GRD	301	GRD		04-142
GRD	305	GRD		04-142
GRD	309	GRD		04-142
GRD	313	GRD		04-142
GRD	317	GRD		04-142
GRD	321	GRD		04-142
GRD	332	GRD		04-142
GRD	336	GRD		04-142
GRD	340	GRD		04-142
GRD	344	GRD		04-142
GRD	345	GRD		04-142
GRD	349	GRD		04-142
GRD	353	GRD		04-142
1SID560	004	1SID560		04-142
1SID560	002	1SID560		04-147

TF 04-146

GRD	000	GRD	04-146
GRD	001	GRD	04-146
GRD	002	GRD	04-146
GRD	003	GRD	04-146
GRD	004	GRD	04-146
GRD	005	GRD	04-146
GRD	006	GRD	04-146
GRD	007	GRD	04-146
GRD	008	GRD	04-146
GRD	009	GRD	04-146
GRD	010	GRD	04-146
GRD	011	GRD	04-146
GRD	012	GRD	04-146
GRD	013	GRD	04-146
GRD	014	GRD	04-146
GRD	015	GRD	04-146
GRD	016	GRD	04-146
GRD	017	GRD	04-146
GRD	018	GRD	04-146
GRD	019	GRD	04-146
GRD	020	GRD	04-146
GRD	021	GRD	04-146
GRD	022	GRD	04-146
GRD	023	GRD	04-146
GRD	024	GRD	04-146
GRD	032	GRD	04-146
GRD	033	GRD	04-146
GRD	034	GRD	04-146
GRD	035	GRD	04-146
GRD	036	GRD	04-146
GRD	037	GRD	04-146
GRD	038	GRD	04-146
GRD	039	GRD	04-146
GRD	040	GRD	04-146
GRD	041	GRD	04-146
GRD	042	GRD	04-146
GRD	043	GRD	04-146
GRD	044	GRD	04-146
GRD	045	GRD	04-146
GRD	046	GRD	04-146
GRD	047	GRD	04-146
GRD	048	GRD	04-146
GRD	049	GRD	04-146
GRD	050	GRD	04-146
GRD	051	GRD	04-146
GRD	052	GRD	04-146
GRD	053	GRD	04-146
GRD	054	GRD	04-146
GRD	055	GRD	04-146
GRD	056	GRD	04-146

Copyright (C) 1996 AT&T
All Rights Reserved

MEMORY EXPANSION UNIT

DWG SIZE	ISSUE
C2	9B

AT&T	SD-5D048-01	SHEET
		B19

PRINTED IN U.S.A

PART OF FS 2

MEMORY EXPANSION, SIDE 1
MAIN STORE MEMORY ARRAY
ADDRESS AND CONTROL, SIDE 1

1MSM72
04-148
(X) TN28
(M) TN56
(ZA) TN2012

TF 04-152

GRD	000	GRD	04-152
GRD	001	GRD	04-152
GRD	002	GRD	04-152
GRD	003	GRD	04-152
GRD	004	GRD	04-152
GRD	005	GRD	04-152
GRD	006	GRD	04-152
GRD	007	GRD	04-152
GRD	008	GRD	04-152
GRD	009	GRD	04-152
GRD	010	GRD	04-152
GRD	011	GRD	04-152
GRD	012	GRD	04-152
GRD	013	GRD	04-152
GRD	014	GRD	04-152
GRD	015	GRD	04-152
GRD	016	GRD	04-152
GRD	017	GRD	04-152
GRD	018	GRD	04-152
GRD	019	GRD	04-152
GRD	020	GRD	04-152
GRD	021	GRD	04-152
GRD	022	GRD	04-152
GRD	023	GRD	04-152
GRD	024	GRD	04-152
GRD	032	GRD	04-152
GRD	033	GRD	04-152
GRD	034	GRD	04-152
GRD	035	GRD	04-152
GRD	036	GRD	04-152
GRD	037	GRD	04-152
GRD	038	GRD	04-152
GRD	039	GRD	04-152
GRD	040	GRD	04-152
GRD	041	GRD	04-152
GRD	042	GRD	04-152
GRD	043	GRD	04-152
GRD	044	GRD	04-152
GRD	045	GRD	04-152
GRD	046	GRD	04-152
GRD	047	GRD	04-152
GRD	048	GRD	04-152
GRD	049	GRD	04-152
GRD	050	GRD	04-152
GRD	051	GRD	04-152
GRD	052	GRD	04-152
GRD	053	GRD	04-152
GRD	054	GRD	04-152
GRD	055	GRD	04-152
GRD	056	GRD	04-152

TF 04-153

SPARE11	022	SPARE11	04-153
SPARE13	023	SPARE13	04-153
SPARE14	024	SPARE14	04-153
SPARE15	032	SPARE15	04-153
SPARE16	033	SPARE16	04-153
SPARE17	034	SPARE17	04-153
1GSMEQ0	021	1GSMEQ0	04-153
1GSMEQ0	011	1GSMEQ0	04-142

Copyright (C) 1996 AT&T
All Rights Reserved

MEMORY EXPANSION UNIT

DWG SIZE	ISSUE
C2	8B

AT&T	SD-5D048-01	SHEET
		B20

PRINTED IN U.S.A

PART OF FS 2

MEMORY EXPANSION, SIDE 1
MAIN STORE MEMORY ARRAY

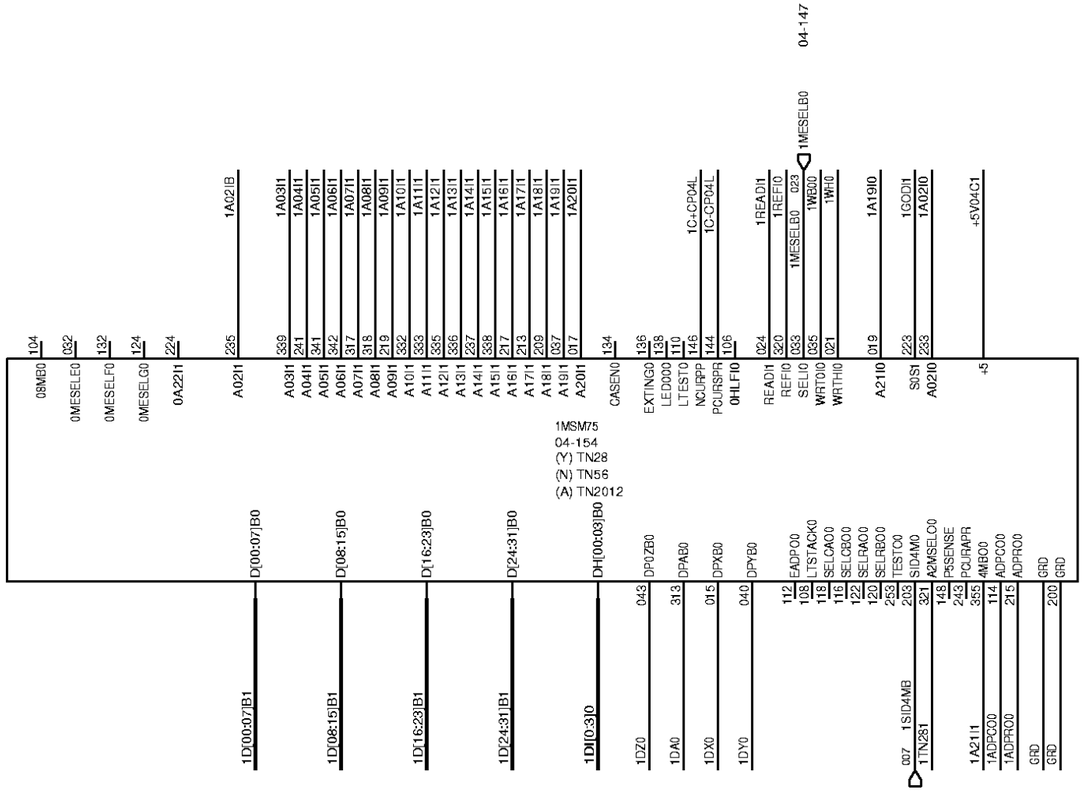

Copyright (C) 1996 AT&T
All Rights Reserved

MEMORY EXPANSION UNIT	DWG SIZE C2	ISSUE 8B
AT&T	SD-5D048-01	SHEET B21

PRINTED IN U.S.A

PART OF FS 2

MEMORY EXPANSION, SIDE 1
MAIN STORE MEMORY ARRAY

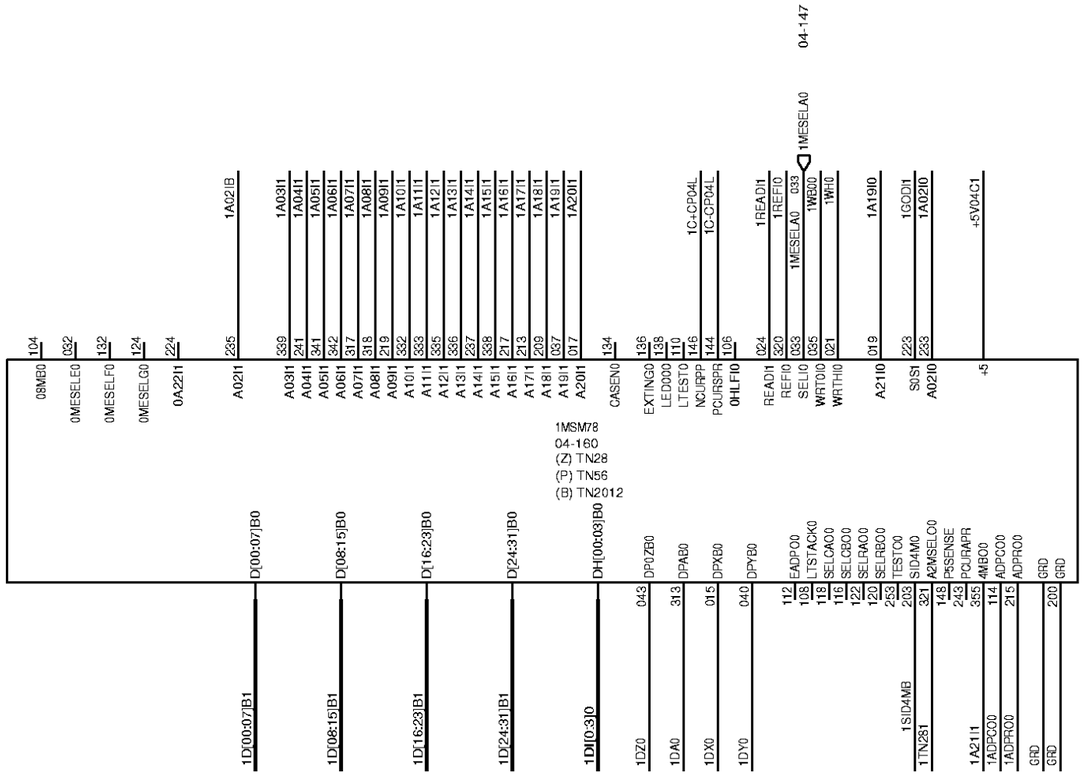

Copyright (C) 1996 AT&T
All Rights Reserved

MEMORY EXPANSION UNIT	DWG SIZE C2	ISSUE 8B
AT&T	SD-5D048-01	SHEET B22

PRINTED IN U.S.A

PART OF FS 2

MEMORY EXPANSION, SIDE 1
POWER CONVERTER

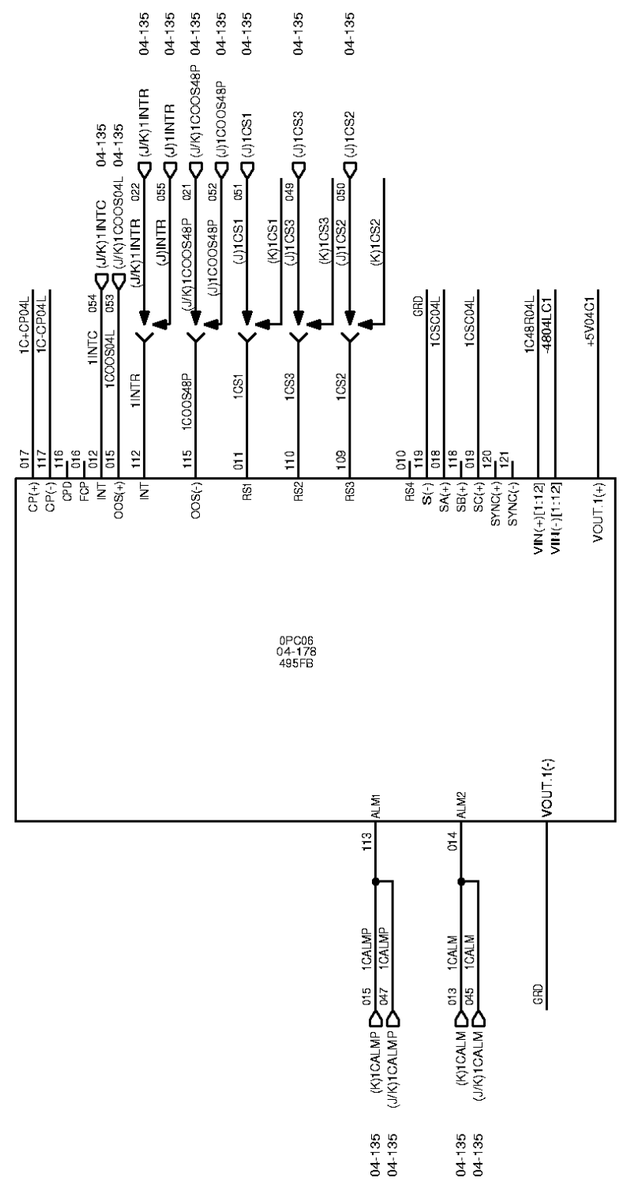

Copyright (C) 1996 AT&T
All Rights Reserved

MEMORY EXPANSION UNIT

DWG SIZE	ISSUE
C2	8B

AT&T	SD-5D048-01	SHEET
		B23

PRINTED IN U.S.A

PART OF FS 2

MEMORY EXPANSION, SIDE 1

POWER AND GROUND LUGS

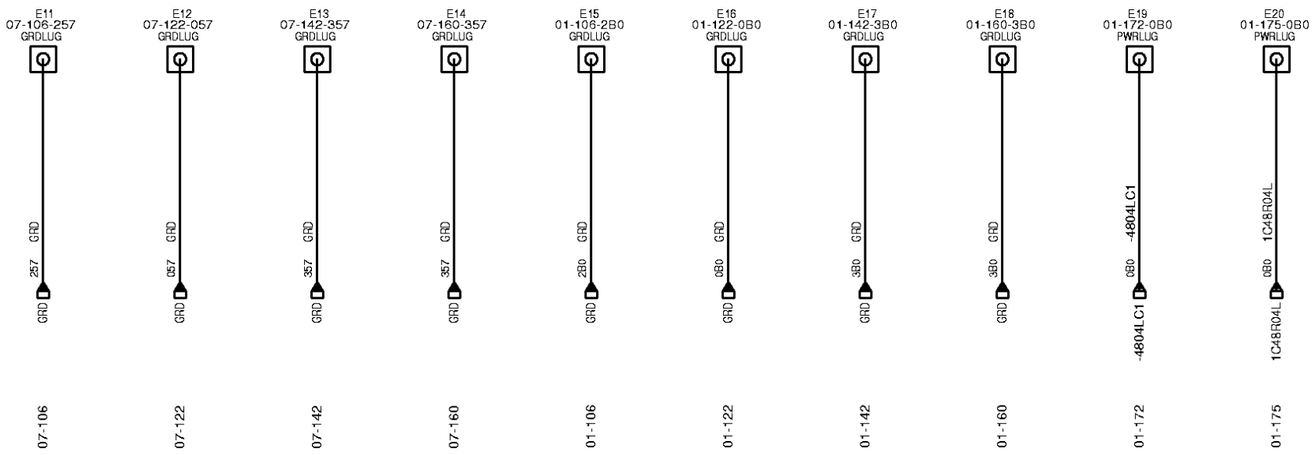

Copyright (C) 1996 AT&T
All Rights Reserved

MEMORY EXPANSION UNIT

DWG SIZE	ISSUE
C2	8B

AT&T	SD-5D048-01	SHEET
		B24

PRINTED IN U.S.A

APPARATUS FIGURES

EQL	04-016	04-022	04-028	04-034	04-046	04-052	04-058	04-064	04-070	04-076	04-082	04-100	04-106	04-112	04-118	04-124	04-130	04-136	04-148	04-154	04-160	04-178
APPARATUS FIGURE NUMBER	CODE	CODE	CODE	CODE	CODE	CODE	CODE	CODE	CODE	CODE	CODE	CODE	CODE	CODE	CODE	CODE	CODE	CODE	CODE	CODE	CODE	CODE
1*									SPARE	SPARE			SPARE	SPARE								
2	495FB										TN1370(ZC) BERG(ZK)	TN1370(ZC) BERG(ZK)										495FB
3		TN28(Z)	TN28(Y)	TN28(X)	TN28(W)	TN28(V)	TN28(U)	TN28(T)							TN28(T)	TN28(U)	TN28(V)	TN28(W)	TN28(X)	TN28(Y)	TN28(Z)	
3		TN56(P)	TN56(N)	TN56(M)	TN56(G)	TN56(F)	TN56(E)	TN56(D)							TN56(D)	TN56(E)	TN56(F)	TN56(G)	TN56(M)	TN56(N)	TN56(P)	
3		TN2012(B)	TN2012(A)	TN212(ZA)															TN212(ZA)	TN2012(A)	TN2012(B)	
4 **																						
5					TN1409 (ZL,ZM,ZT)	TN1409 (ZL,ZM,ZT)											TN1409 (ZL,ZM,ZT)	TN1409 (ZL,ZM,ZT)				
6							TN1419(ZH)	TN1419(ZH)							TN1419(ZH)	TN1419(ZH)						

* WIRING AS PER FS 1 AND 2
** SHORTING BERGS (982ET) SEE NOTE 307

Copyright (C) 1996 AT&T
All Rights Reserved

MEMORY EXPANSION UNIT

DWG SIZE C2 | ISSUE 9B

AT&T | SD-5D048-01 | SHEET C1

PRINTED IN U.S.A

CIRCUIT NOTES:

101.

DESIG	FUSE AMP	POTENTIAL	ONE PER
70D	5A	-48V	SERVICE GROUP

BATTERY SYMBOL	VOLTAGE RANGE

Copyright (C) 1996 AT&T
All Rights Reserved

MEMORY EXPANSION UNIT

DWG SIZE	ISSUE
C2	8B

AT&T	SD-5D048-01	SHEET
		D1

PRINTED IN U.S.A

201. UNLESS OTHERWISE SPECIFIED. ALL BACKPLANE WIRING WILL BE AUTOMATIC MACHINE WIRING (A-D4) 30 GAUGE WHICH HAS BEEN PROCESSED BY THE NESWRAP PROGRAMS.

202. ALL PRINTED WIRING CONNECTIONS ARE SPECIFIED BY ED-5D525

203.

APPARATUS CODE	CIRCUIT PACK REMOVAL PROCEDURES		
	PULL HOT	REMOVE UNIT POWER	SEQENCED
495FB	NO	POWER DOWN UNIT	NO
TN28	NO	POWER DOWN UNIT	NO
TN56	NO	POWER DOWN UNIT	NO
TN2012	NO	POWER DOWN UNIT	NO
TN1409	NO	POWER DOWN UNIT	NO
TN1419	NO	POWER DOWN UNIT	NO

Copyright (C) 1996 AT&T
All Rights Reserved

MEMORY EXPANSION UNIT

DWG SIZE C2 | ISSUE 8B

AT&T | SD-5D048-01 | SHEET D2

PRINTED IN U.S.A

INFORMATION NOTES:

301. UNLESS OTHERWISE SPECIFIED:
RESISTANCE VALUES ARE IN OHMS,
CAPACITANCE VALUES ARE IN MICROFARADS,
VALUES PRECEDED BY THE SYMBOL + (PLUS)
OR - (MINUS) ARE IN VOLTS.

302.

FEATURE OR OPTION	PROVIDE		
	APP FIG	APP OR WRG	QUANTITY
PRINTED BACKPLANE & SURFACE WIRING	1		1 PER UNIT
ADDITIONAL WIRING ALWAYS REQUIRED		ZB	
WIRING ADDED FOR SMP23 FEATURE		ZD	
WIRING REMOVED FOR SMP23 FEATURE		ZE	
CABLING REQUIRED FOR ALARM SIGNALING (SEE NOTE 305)			
TO SMPU2 & TSIU2		K	
TO MCTU		J	
MINIMUM EQUIPPAGE	2		
495FB POWER CONVERTER			
TN1370 TERMINATOR BOARD (ALWAYS REQUIRED)		ZC	
MEMORY GROWTH AT 1 MBYTE (TN28) 2 MBYTE (TN56), OR 4 MBYTE (TN2012 INCREMENTS	3		MINIMUM 1 PER APP FIG. 1
TN28			
04-022, 04-160		Z	
04-028, 04-154		Y	
04-034, 04-148		X	
04-046, 04-136		W	
04-052, 04-130		V	
04-058, 04-124		U	
04-064, 04-118		T	
TN56			
04-022, 04-160		P	
04-028, 04-154		N	
04-034, 04-148		M	
04-046, 04-136		G	
04-052, 04-130		F	
04-058, 04-124		E	
04-064, 04-118		D	
TN2012			
04-022, 04-160		B	
04-028, 04-154		A	
04-034, 04-148		ZA	
982ET SHORTING BERGS REQUIRED FOR MEMORY GROWTH BEYOND 3 MEMORY CIRCUIT PACKS. (NOTES 306 & 307)	4		5 PER SIDE
SMP12 WITH SPLIT MEMORY	5		1 PER CKT
TN1409			
04-046, 04-130 04-052, 04-136		ZL	
WIRES REMOVED		ZN	
WIRES ADDED		ZF	

INFORMATION NOTES (CONT):

302. (CONT)

FEATURE OR OPTION	PROVIDE		
	APP FIG	APP OR WRG	QUANTITY
SMP23 WITH SPLIT MEMORY	5		1 PER CKT
TN1409			
04-046, 04-130 04-052, 04-136		ZM	
WIRES REMOVED		ZP	
WIRES ADDED		ZG	
TERMINATOR PADDLEBOARDS		ZK	3 PER SIDE
SMP23X	6		1 PER CKT
TN1419			
04-058, 04-124 04-064, 04-118		ZH	
WIRES REMOVED		ZQ	
WIRES ADDED		ZJ	
TERMINATOR PADDLEBOARDS		ZK	3 PER SIDE
SMP23CDMC			4 PER CKT
CIRCUIT PACKS REMOVED		ZT	
WIRES REMOVED		ZU	

INFORMATION NOTES (CONT):

303.

RECORD OF FIGURES, WIRING AND APPARATUS CHANGES						
CHANGED ON ISS	IF JOB RECORDS DO NOT SPECIFY	THIS OPTION WAS FURN	SEE NOTE	USE IN CIRCUIT		
				STD	A&M	MD
3AC	K OR J	K	305	K OR J		
			308	AVAIL		DA
4B	APP FIG. 4	4	306 307	AVAIL		
	APP FIG. 3	W,V U,T		AVAIL		
5B	APP FIG. 3	ZA,A,B, D,E,F, G		AVAIL		
6A	APP FIG. 1	ZB		REQ		
6A	APP FIG. 2	ZC		REQ		
7B	ZD	ZE		ZD,ZE		
8B	ZL,ZM, ZH,ZK	NONE		ZL,ZM, ZH,ZK		
8B	ZG ZF ZJ	ZP ZN ZQ		ZN ZP ZQ ZG ZF ZJ		
9B		ZU ZT		ZU ZT		

304.

CIRCUIT PACK CODE OR MICROCODE	COMMON LANGUAGE EQUIPMENT IDENTIFICATION CODE (CLEI)
TN28	SP3004AAXX
TN56	SP3013JAXX
TN1370	E5PQBAAXX
TN2012	SPPQ03WAXX
495FB	PWPQ54EAXX
TN1419	E5PQAG5AAA
TN1409	E5PQAAWA

INFORMATION NOTES (CONT):

305. OPTIONS K AND J DESIGNATE THE ALARM SIGNAL CABLES LEAVING THE MEU AND TERMINATING AT THE SMPU2 AND TSIU2 OR MCTY RESPECTIVELY.

306. APP FIG. 4 MUST BE EQUIPPED WITH OPTION W OR G.

307. 982ET SHORTING BERGS ARE LOCATED AT THE FOLLOWING EQL'S

04-040-145
04-040-300
04-040-313
04-040-332
04-040-345
04-142-145
04-142-300
04-142-313
04-142-332
04-142-345

308. PRIOR TO ISSUE 5B, COLUMNS HEADED "STD", "MD" ETC., CONVEYED APPLICATIONS INFORMATION. AT ISSUE 5B, COLUMNS HEADED "AVAIL" AND "DA" NOW INDICATE THE AVAILABILITY OF THE PRODUCT.

309. OPTION ZC AND OPTION ZK ARE MUTUALLY EXCLUSIVE.

Copyright (C) 1996 AT&T
All Rights Reserved

MEMORY EXPANSION UNIT

DWG SIZE C2 | ISSUE 9B

AT&T | SD-5D048-01 | SHEET D3

PRINTED IN U.S.A

UNIT SYMBOL TABLE OF CONTENTS				
FUNCTION		DESCRIPTION (LOWER LEFT PIN OF CONNECTOR)	SIZE	ELEMENT
ADDRESS AND MEMORY CONTROL	SIDE 0	(04-039-045) SMPUC0	2 X 12	07
		(04-039-032) SMPUC0	2 X 12	08
		(04-039-013) SMPUC0	2 X 12	18
		(04-039-000) SMPUC0	2 X 12	19
	SIDE 1	(04-147-045) SMPUC1	2 X 12	03
		(04-147-032) SMPUC1	2 X 12	04
		(04-147-013) SMPUC1	2 X 12	14
		(04-147-000) SMPUC1	2 X 12	15
DATA AND BUFFERED DATA	SIDE 0	(04-033-045) SMPUC0	2 X 12	09
		(04-033-032) SMPUC0	2 X 12	10
		(04-033-013) SMPUC0	2 X 12	20
		(04-033-000) SMPUC0	2 X 12	21
	SIDE 1	(04-153-045) SMPUC1	2 X 12	01
		(04-153-032) SMPUC1	2 X 12	02
		(04-153-013) SMPUC1	2 X 12	12
		(04-153-000) SMPUC1	2 X 12	13
CONTROL SIGNAL	SIDE 0	(04-016-109) (K) SMPU2	2 X 3	22
	SIDE 1	(04-178-109) (K) SMPU2	2 X 3	11
POWER	SIDE 0	(01-015-0B0) POWER LUG	LUG	23
		(01-016-016) POWER LUG	LUG	23
		(01-022-0B0) RETURN LUG	LUG	23
		(01-040-1B0) RETURN LUG	LUG	23
		(01-058-0B0) RETURN LUG	LUG	23
		(01-076-0B0) RETURN LUG	LUG	23
		(07-071-057) RETURN LUG	LUG	23
		(07-040-157) RETURN LUG	LUG	23
		(07-058-057) RETURN LUG	LUG	23
		(07-076-057) RETURN LUG	LUG	23
	SIDE 1	(01-172-0B0) POWER LUG	LUG	23
		(01-175-0B0) POWER LUG	LUG	23
		(01-106-2B0) RETURN LUG	LUG	23
		(01-122-2B0) RETURN LUG	LUG	23
		(01-142-3B0) RETURN LUG	LUG	23
		(01-160-3B0) RETURN LUG	LUG	23
		(07-106-257) RETURN LUG	LUG	23
		(07-122-057) RETURN LUG	LUG	23
		(07-142-357) RETURN LUG	LUG	23
		(07-160-357) RETURN LUG	LUG	23

UNIT SYMBOL TABLE OF CONTENTS				
FUNCTION		DESCRIPTION (LOWER LEFT PIN ONF CONNECTRO)	SIZE	ELEMENT
ALARM SIGNAL	SIDE 0	(04-057-045) (K) SMPU2	2 X 12	25
		(04-057-045) (J) MCTU	2 X 12	06
		(04-057-013) TSIU2 PWR0	2 X 12	17
	SIDE 1	(04-135-045) (K) SMPU2	2 X 12	24
		(04-135-045) (J) MCTU	2 X 12	05
		(04-135-013) TSIU2 PWR1	2 X 12	16

Copyright (C) 1996 AT&T
All Rights Reserved

MEMORY EXPANSION UNIT

DWG SIZE C2 | ISSUE 8B

AT&T | SD-5D048-01 | SHEET GB1

PRINTED IN U.S.A

CIRCUIT ACCESS REFERENCE DATA

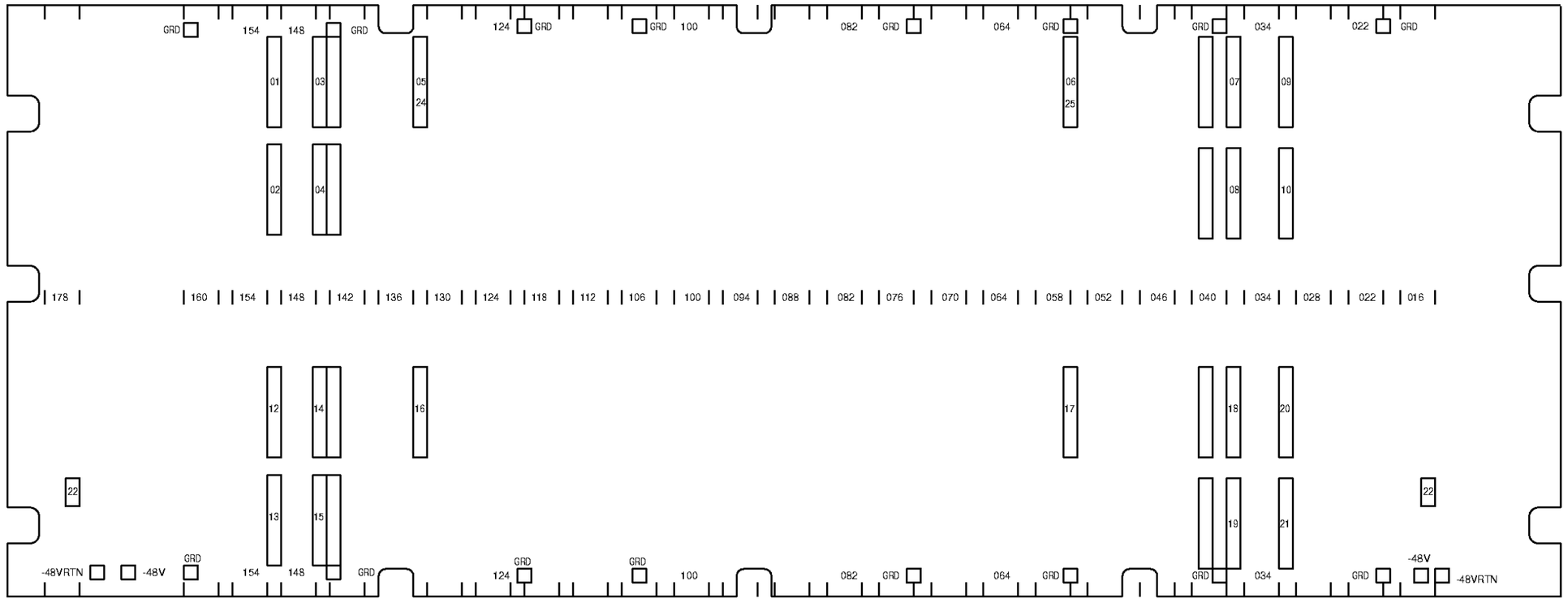

NOTES:

1. POWER AND GROUND LUGS ARE ELEMET 23.
2. ALL MISCELLANEOUS CONNECTORS ARE 982ET SHORTING BERGS AT EQUIPMENT LOCATIONS 04-040 AND 04-142.

FIG. 1

BACKPLANE PICTORIAL WIRING SIDE

Copyright (C) 1996 AT&T
All Rights Reserved

MEMORY EXPANSION UNIT	DWG SIZE	ISSUE
	C2	8B
AT&T	SD-5D048-01	SHEET GB2

PRINTED IN U.S.A

CAD 1

UNIT SYMBOL

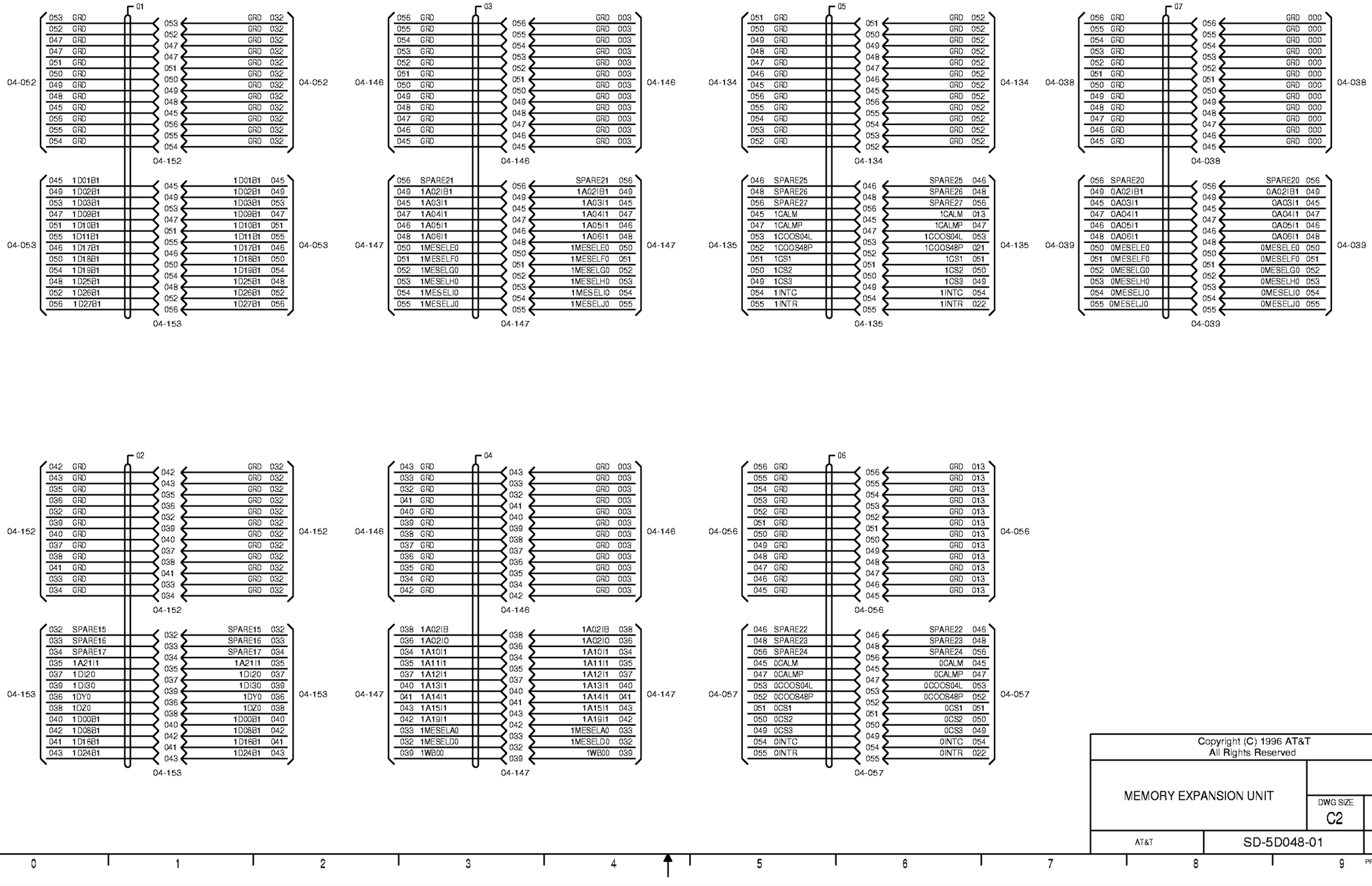

Copyright (C) 1996 AT&T
All Rights Reserved

MEMORY EXPANSION UNIT

DWG SIZE	ISSUE
C2	8B

AT&T	SD-5D048-01	SHEET
		G1

PRINTED IN U.S.A

CAD 1

UNIT SYMBOL

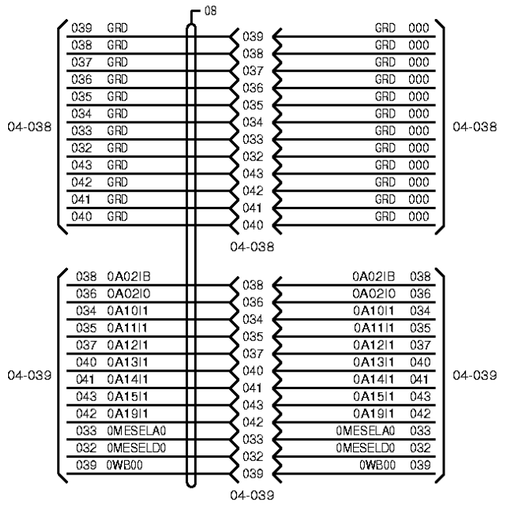

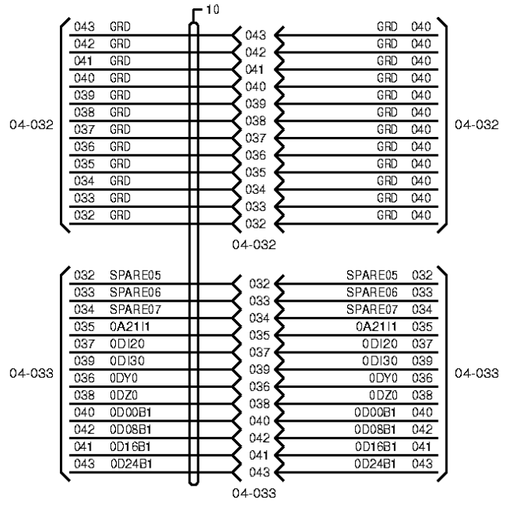

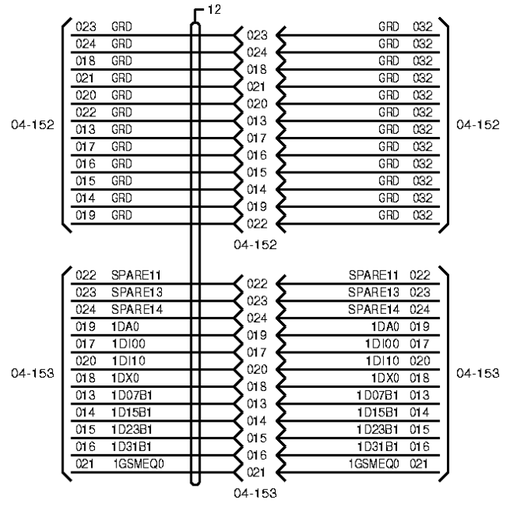

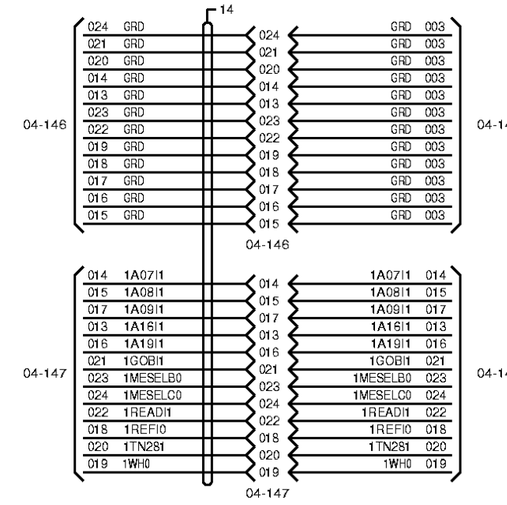

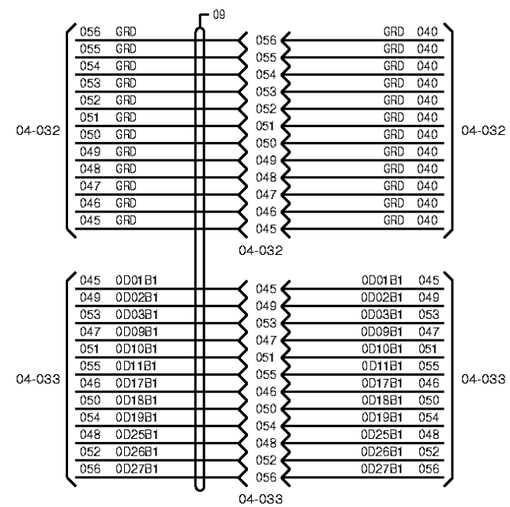

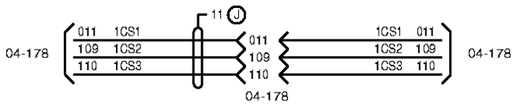

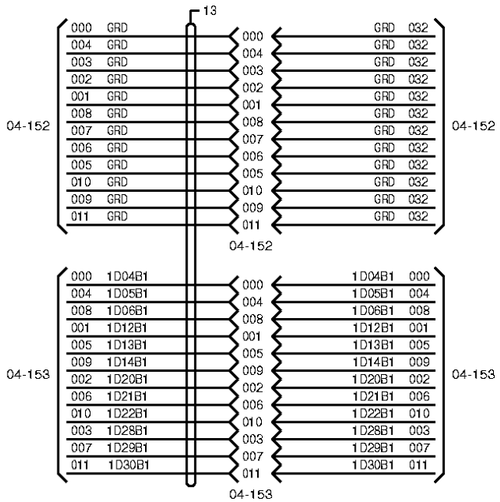

Copyright (C) 1996 AT&T
All Rights Reserved

MEMORY EXPANSION UNIT

DWG SIZE	ISSUE
C2	8B

AT&T	SD-5D048-01	SHEET
		G2

PRINTED IN U.S.A

CAD 1

UNIT SYMBOL

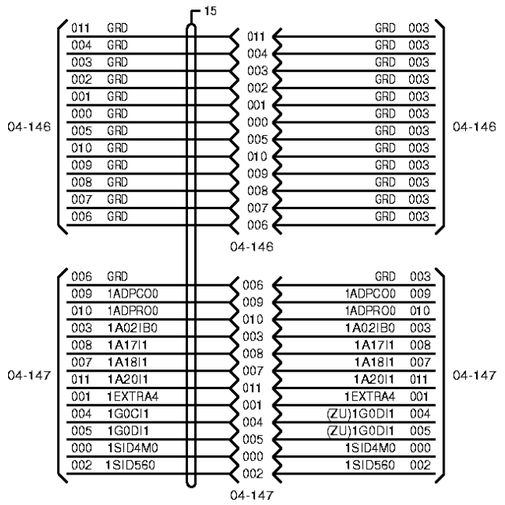

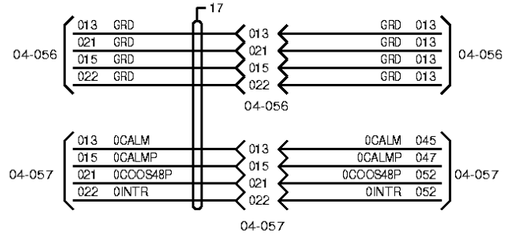

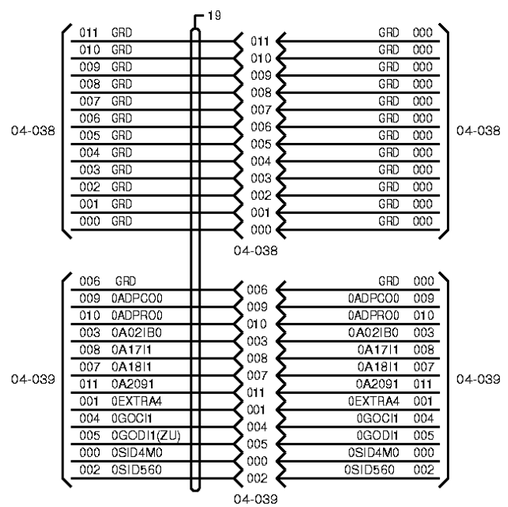

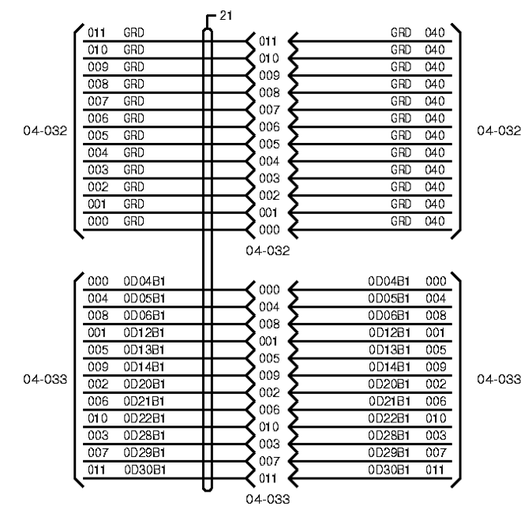

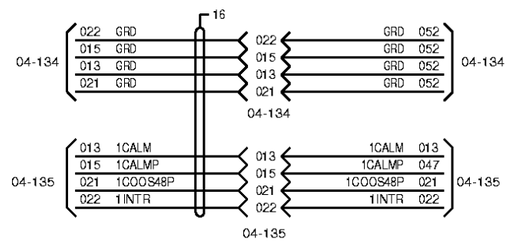

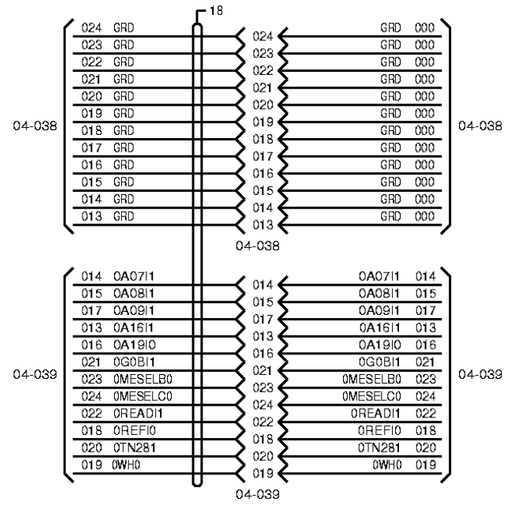

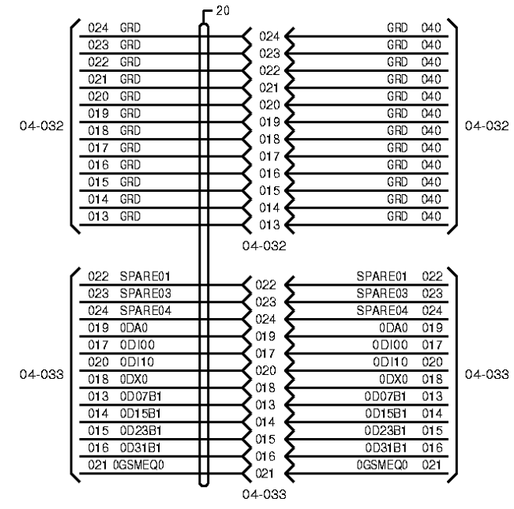

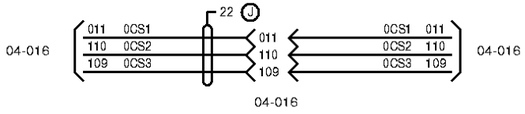

Copyright (C) 1996 AT&T
All Rights Reserved

MEMORY EXPANSION UNIT

DWG SIZE	ISSUE
C2	9B

AT&T	SD-5D048-01	SHEET
		G3

PRINTED IN U.S.A

CAD 1

UNIT SYMBOL

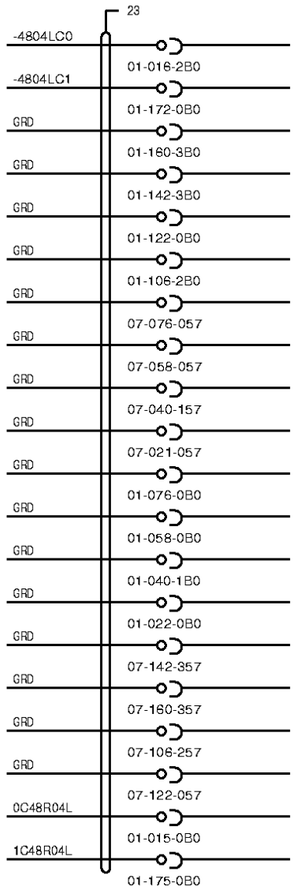

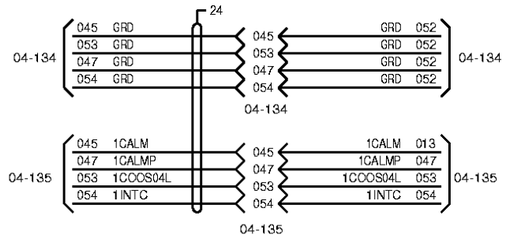

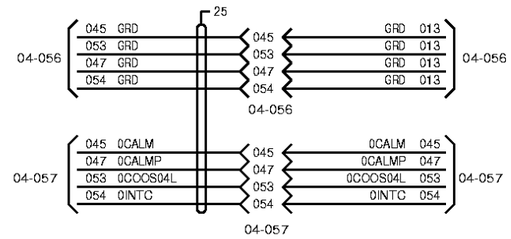

Copyright (C) 1996 AT&T
All Rights Reserved

MEMORY EXPANSION UNIT

DWG SIZE	ISSUE
C2	8B

AT&T	SD-5D048-01	SHEET
		G4

PRINTED IN U.S.A