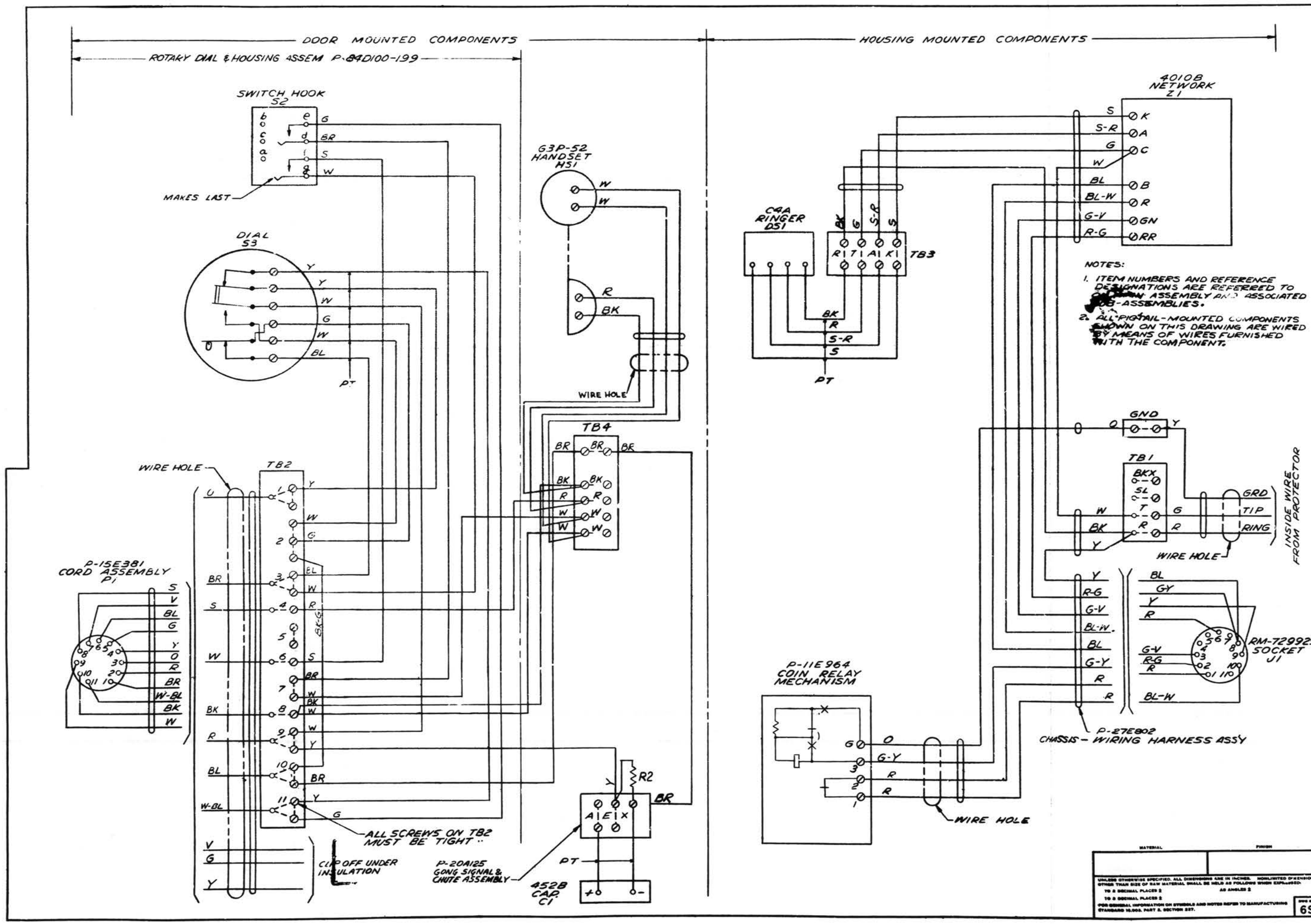
DOOR MOUNTED COMPONENTS
HOUSING MOUNTED COMPONENTS
ROTARY DIAL & HOUSING ASSEM P-84D100-199
SWITCH HOOK S2
MAKES LAST
DIAL S3
G3P-52 HANDSET HS1
WIRE HOLE
TB4
TB2
P-15E381 CORD ASSEMBLY P1
ALL SCREWS ON TB2 MUST BE TIGHT
CLIP OFF UNDER INSULATION
P-20A125 GONG SIGNAL & CHUTE ASSEMBLY
R2
452B CAP. C1
C4A RINGER DS1
TB3
4010B NETWORK Z1
GND
TB1
GRD
TIP
RING
INSIDE WIRE FROM PROTECTOR
RM-729929 SOCKET J1
P-11E964 COIN RELAY MECHANISM
P-27E802 CHASSIS - WIRING HARNESS ASS'Y
NOTES:
1. ITEM NUMBERS AND REFERENCE DESIGNATIONS ARE REFERRED TO ASSEMBLY AND ASSOCIATED SUB-ASSEMBLIES.
2. ALL PIGTAIL-MOUNTED COMPONENTS SHOWN ON THIS DRAWING ARE WIRED BY MEANS OF WIRES FURNISHED WITH THE COMPONENT.
A-580312
REDRAWN DUE TO EXTENSIVE CHANGES
ADDED ITEM NUMBERS & NOTES
CHANGED: AT S2, G & BR LEADS WERE BR & GR; AT P1, W-BL LEAD WAS CLIPPED OFF UNDER INS.
CHANGE: TERMINAL BOARD TB4 WAS SHOWN THUS:
11-16-65
FOR CHARGES REFER TO DFTG CARD INDEX
ROTARY WIRING DIAGRAM
SCALE NONE
WESTERN ELECTRIC CO. INC.
ENGINEER OF MANUFACTURE
6S
A-580312