SYSTEM STATUS DISPLAYS
NO. 1B NETWORK CONTROL POINT
COMMON CHANNEL SIGNALING

CONTENTS PAGE

1. GENERAL 2

2. DISPLAYS 3

Display Page 100 - Display Page Index 3

Display Page 102 - Common Processor 3

Display Page 103 - Control/Display Update 3

Display Page 104 - Operating System Status Page 3

Display Page 105 - Power Alarms . 3

Display Page 109 - Overload . . . 3

Display Page 114 - CCS Network and Functional Status 4

Display Pages 117 and 118 - Input/Output Processors 0 and 1 4

Display Page 122 - Moving Head Disks 5

Display Page 123 - NSPS Data Links . 5

Display Page 124 - NSPS TTY . . . 5

Display Page 125 - Scan and Signal Distributor 5

Display Page 126 - Magnetic Tape Unit 5

Display Page 127 - BX.25 Network Data Link 5

CONTENTS PAGE

Display Page 151 - Application DSDD-NYNEX 5

Display Page 1106 - Ring Group Status 5

Emergency Action Display Page . . 5

Figures

1. Page Index Display 8

2. Common Processor Display 9

3. Command and Display Update . . . 9

4. Operating System Status Display . . . 10

5. Power Alarm Display 10

6. Overload Display 11

7. CCS Network and Function Status Display 11

8. Input/Output Processor 0 Display . . . 12

9. Input/Output Processor 1 Display . . . 12

10. Moving Head Disk Display 13

11. Network Support Data Link Display . . 13

12. Network Support TTY Display 14

13. Scan and Signal Distributor Display . . 14

14. Magnetic Tape Display 15

15. BX.25 Network Data Link Display . . . 15

16. Application Owned Equip Display . . . 16

Copyright ©1986 AT&T
All Rights Reserved
Printed in U.S.A.

CONTENTS PAGE

17. Ring Group Status Display 16

18. Emergency Action Display 16

1. GENERAL

1.01 This section describes the video display pages used as a maintenance and administrative aid in a 1BNCP (No. 1B network control point) office. The display pages are called up on the maintenance CRT (MCRT) in the 1BNCP maintenance area, sometimes called the LMP (local maintenance position). The LMP also contains a maintenance read-only printer (MROP). The MCRT interfaces with a 3B20D processor complex through a duplicated peripheral system to provide visual displays (pages) that show the current status of the 1BNCP components.

1.02 This section is being reissued to generally bring the text and illustrations up to date. Since this is a general revision, arrows ordinarily used to denote changes have been omitted.

1.03 The generic program issue shown on the displays will be of the form 1NCPDx, where the x will be the current generic being used in the 1BNCP office. A general description of the LMP is presented in Section 256-100-105.

1.04 Some of the display pages are provided as a function of the DMERT (duplex multi-environment real-time) operating system and some are provided as a function of the NSPS (1BNCP support software). In addition to the DMERT and NSPS provided display pages, each application that is resident in the 1BNCP will have its own display page which provides the status of equipment owned by the particular application.

1.05 Wherever possible, interconnections between hardware units are shown on the individual display pages by the use of boxes and lines.

1.06 The reverse video portions of display pages shown in this section are indicated by boxing in the abnormal indicators with heavy lines.

1.07 With few exceptions, all hardware equipment has a text string (active, out-of-service, off-line, etc.) which indicates the state of the equipment. There are eight possible major states for equipment. These states are listed as follows:

(1) ***ACT:*** The unit is active and currently performing online functions.

(2) ***STBY:*** The unit is on standby. It has no known fault. It normally means that this unit can be made active in a short time. Sometimes, however, a unit is dependent on other pieces of equipment in order to be functional. For example, a STBY status on a data link may mean that the data link is not there even though the peripheral controller subdevice is fine.

(3) ***UNAV:*** The unit has been manually made unavailable under any circumstance for normal operation. The unit can, however, be diagnosed if power has not been removed.

(4) ***OFL:*** The unit is off-line. This state is similar to the UNAV state. The difference between UNAV and OFL is that the OFL does not include powering down of the equipment. Therefore, it may be used for an off-line function.

(5) ***OOS:*** The unit is out-of-service. It may be faulty or manually put out of service. Additional information may be contained in the minor state.

(6) ***UEQP:*** The unit is unequipped. The unit is represented in the software, but there is no corresponding hardware in the system. A unit marked unequipped is ignored by the system.

(7) ***INIT:*** The hardware unit is being initialized. This is a transient state.

(8) ***GROW:*** The hardware unit is in the growth state.

1.08 There are also six minor states for equipment. They are listed as follows:

(1) ***FALT:*** The unit is faulty.

(2) ***MAN:*** A manual action caused the equipment to go out-of-service.

(3) ***AUTO:*** An internal process, such as the automatic diagnostic process, caused the equipment to go out-of-service.

(4) ***INH:*** Error detection on this unit is inhibited.

(5) ***BYP:*** The unit is used as a bypass cache store.

(6) ***FRCD:*** The CU (control unit) is forced online.

1.09 The FALT, MAN, and AUTO apply when the unit is in the OOS state. The INH applies only when the unit is in the active or standby state. The BYP applies to the cache store unit only, and only when it is in active or standby state. The FRCD applies to the control unit only, and only when the control unit is active.

2. DISPLAYS

Display Page 100 - Display Page Index

2.01 The page index (display page 100) is shown in Fig. 1 and lists all existing display pages for generic 1NCPDx. Each entry listed on the page index consists of a CMD (command or page number) and a page title. Whenever there is any abnormal condition existing in a page, the corresponding entry in the page index becomes ***reverse video*** to draw attention to the condition; otherwise, the entries in the page index are in normal video. In a way then, the page index gives a summary of the status of all the other pages.

Display Page 102 - Common Processor

2.02 The common processor display page is illustrated in Fig. 2 and consists of the primary functional units of the 3B20D computer and a list of available menu commands to manipulate these units. The menu commands provide a convenient substitute for typing input messages.

Display Page 103 - Control/Display Update

2.03 The C/D (control/display) update display page (Fig. 3) consists of a list of menu commands to stop certain craft interface processes that are currently running and the commands to restart them. Using these commands allows selective restart of a specific craft interface process rather than reinitializing all craft interface processes when that is not necessary.

Display Page 104 - Operating System Status Page

2.04 An example of a system status display page is illustrated in Fig. 4. It presents levels of resource use for those resources subject to overload. As known events occur (such as activation of an application) the impact on the system can be displayed. The display uses bar graphs to show the resource versus the percentage of resource used. The display also has a menu list for changing display rate timing.

Display Page 105 - Power Alarms

2.05 The power alarm display is illustrated in Fig. 5 and includes all of the power plant alarms. Alarm conditions include high or low voltage, fuse alarms, rectifier failure, etc.

Display Page 109 - Overload

2.06 The overload display page (Fig. 6) reflects the overload status of the system. There are basically four types of overload in the system:

- ***PROC:*** Processor real-time usage. When the processor is overloaded, the indicator will be displayed in reverse video with the overload level anywhere from 0 to 8. The higher the overload level, the more severe the system is overloaded. If the processor is not overloaded, the indicator will be displayed in normal video with the text "NOT OVERLOADED" displayed in place of an overload level.

- ***DISK:*** Disk usage. When the disk usage is overloaded, the indicator will be displayed in reverse video with the text "OVERLOADED." If disk usage is not overloaded, the indicator will be displayed in normal video with the text "NOT OVERLOADED."

- ***FILE SYSTEM RESOURCE:*** File system resource usage. When the file system resource is overloaded, the indicator will be displayed in reverse video with the text "OVERLOADED." Otherwise, the indicator will be displayed in normal video with the text "NOT OVERLOADED."

- ***MESSAGE BUFFER RESOURCE:*** Message buffer resource usage. When the message buffer resource is overloaded, the indicator will be displayed in reverse video

with the text "OVERLOADED." If it is not overloaded, the indicator will be displayed in normal video with the text "NOT OVERLOADED."

Display Page 114 - CCS Network and Functional Status

2.07 The CCS network and functional status display (Fig. 7) is divided into two parts. The first part corresponds to the CCS network -- 2ASTP (No. 2A signal transfer point) indicators. The second part corresponds to the application status.

(A) In the 2ASTP portion of the page , there are two indicators: EVEN A-LKS and ODD A-LKS. The state of these indicators can be ACT, OOS, or UNKN corresponding to the status of the particular link set. When the 2ASTP has no connections to the 2ASTP network (e.g., no A-links), the two indicators will be displayed in normal video and marked NAPL.

(B) The function portion of page 114 displays the status of local and mate 1BNCP applications. The NSPS is considered as one of the applications on this display (with index = 0, type = 1BNCP, and owner = e.g., NYNEX). The state of an application will be shown in normal video if and only if it is equipped and active. Otherwise, it will be shown in reverse video. Both major and minor states of each application are shown on the display. The major state corresponds to an applications administrative state and the minor state corresponds to an applications program state. The major states are listed as follows:

(1) ***DISABLED:*** The starting state for the installation of an application

(2) ***GROW:*** The state where the routing capability in the network is established before putting the application in service

(3) ***UNEQUIPPED:*** The state where office data for the application has been integrated into the system and customer data may be loaded

(4) ***EQUIPPED:*** The state where the application is ready to serve traffic.

The minor states are listed as follows:

(1) ***ACT:*** Active

(2) ***OOS:*** Out-of-service

(3) ***TRANSIT:*** In transition from ACT to OOS

(4) ***BOOT:*** Application is being terminated and recreated

(5 ***TROUBLE:*** The application has been in BOOT state for over 30 minutes or it cannot be recovered automatically.

The MISC indicator is controlled by an application. Currently defined states for this indicator are:

(1) ***APTERM:*** When the applications program is being terminated by the system

(2) ***APBOOT:*** When the applications program is being recreated

(3) ***NORMAL:*** When the applications program is running normally.

The MISC indicator for page 114 also indicates the state of the CNI (common network interface). The allowable states are listed as follows:

(1) ***CNI-OOS:*** The CNI is out-of-service

(2) ***CNI-BOOT:*** The CNI is being recreated

(3) ***CNI-ACT:*** The CNI is running normally

(4) ***CNI-TRBL:*** The CNI cannot be recovered automatically.

Display page 114 is designed to hold six applications (including the NSPS).

Display Pages 117 and 118 - Input/Output Processors 0 and 1

2.08 The IOP (input/output processor) (0 and 1) display pages 117 and 118 are shown in Fig. 8 and 9. These two figures display the status of the PCs (peripheral controllers) under the IOP 0 or 1 group community. They contain such equipment as the TTYC (TTY controller), the HSDC (high-speed data

link controller), the SDLC (synchronous data link controller), the MTTYC (maintenance TTY controller), the MTC (magnetic tape controller), and the SCSDC (scan and signal distributor controller). The four boxes shown in Fig. 8 and 9 correspond to the four peripheral controller groups under an input/output processor.

Display Page 122 - Moving Head Disks

2.09 Figure 10 displays the status of all the MHDs (moving head disks) in the system. It also lists menu command codes for removing, restoring, and diagnosing both the disk drives and their controllers.

Display Page 123 - NSPS Data Links

2.10 The status of data links between the 1BNCP and OSSs (operation support systems) locations are displayed in Fig. 11. This figure displays the status of all the NSPS owned synchronous data links(e.g., links going to the Switching Control Center System). The display also contains menu command codes for removing, restoring, and diagnosing the data links.

Display Page 124 - NSPS TTY

2.11 The NSPS also has a TTY display (Fig. 12). This figure displays the status of the NSPS owned TTYs. A TTY may represent a local administration terminal, a local maintenance terminal, an asynchronous data link to a remote terminal, a local read-only printer, etc. The TTY display page lists menu command codes for removing, restoring, and diagnosing TTY controllers.

Display Page 125 - Scan and Signal Distributor

2.12 The scan and signal distributor display is shown in Fig. 13. This figure displays the status of all the scan and signal distributors in the 1BNCP. This display also lists menu commands for removing, restoring, and diagnosing the associated hardware.

Display Page 126 - Magnetic Tape Unit

2.13 The status of the system magnetic tape unit in the 1BNCP 3B20D is displayed in Fig. 14. The display also lists menu commands for removing, restoring, and diagnosing the magnetic tape hardware.

Display Page 127 - BX.25 Network Data Link

2.14 This display page is illustrated in Fig.15 and shows the status of NSPS-owned BX.25 network data link hardware (e.g., data link to a local packet switching network). The display also lists menu command codes for removing, restoring, and diagnosing the associated hardware.

Display Page 151 - Application DSDD-NYNEX

2.15 Figure 16 shows a DSDD application display as an example. Display page 151 could be used for any application. This figure displays the equipment owned by the application -- identified by type and owner. This display is created dynamically while an application is being introduced into the system. Specifically, the display is based on the new application specification file created by the INSTL (install) command. The LECD table in a specification file is where information about an application owned equipment resides. The PARM table in an application specification file identifies the type and owner of an application. The kind of equipment contained in the display will most likely be TTYs and synchronous data links similar to Fig. 11 and 12, which correspond to synchronous data links and TTYs owned by NSPS. Due to the dynamic nature of the figure, no boxes are used in displaying the status of the equipment. The name of the controller of the equipment owned by an application is also displayed, but not its state. The state of the controllers can be found on IOP displays Fig. 8 and 9. Any other application displays associated with applications resident at the 1BNCP will be displayed on display pages numbered consecutively from 151 to 155. Each will be identified by application type and owner.

Display Page 1106 - Ring Group Status

2.16 The status of the LNs (link nodes) and RPCNs (ring peripheral controller nodes) used to connect the 1BNCP with 56K A-links is displayed in the ring group status display. This display is illustrated in Fig. 17. This display page also lists menu command codes for removing, restoring, and diagnosing these units.

Emergency Action Display Page

2.17 The EA (emergency action) display, Fig. 18, shows the command menu that can be made in

the EAI (emergency action interface) mode. The menu items are listed as follows:

MTTY: This single digit increments once every 2 seconds to indicate the sanity of the MTTYPC (maintenance teletypewriter peripheral controller) and its ability to update the display.

Note: If this digit is not incrementing, none of the indicators on the EAI display can be considered valid.

EAI-0 and EAI-1: In reverse video, these indicate certain states of the EAI as follows:

- ASW: All Seems Well. The EAI is communicating with the MTTYPC, and internal audits are passing.
- ERR: Error. This EAI is communicating with the MTTYPC, but internal audits are failing.
- OOS: Out-of-Service. This EAI is not communicating with the MTTYPC.

Note: In this condition, the state of the other display indicators associated with this EAI cannot be considered valid.

CU-0 and CU-1: In reverse video, these indicate certain states of the processors as follows:

- ACT: This CU (control unit) is on-line.
- RUN: This CU is not stopped or halted.
- FONL: This CU is forced on-line by the EAI.
- FOFL: This CU is forced off-line by the EAI.
- RCVRY: This CU has begun executing recovery microcode.

PRM-0 and PRM-1: Normal video shows dynamic PRM (processor recovery messages). Reverse video shows the first failing PRM received after execution of command 26 (SET PRM TRAP).

SCCS ACT: When appearing in reverse video, this indicates that level 2 of the BX.25 protocol has established a connection over the synchronous link.

SET or CLR: When shown in reverse video, these indicate the current state of the associated function. For commands 20 through 27, separate indicators are provided for each CU. For commands 30 through 41, these indicators apply to the active CU.

30 through 43: When shown in reverse video, these indicate the "next state" information which will be sent to the processor on the next execution of commands 50 through 56.

10 FONL-0: Inhibits automatic processor recovery switch capability. It forces CU-0 to be the on-line processor and CU-1 to be off-line.

11 FONL-1: Same as 10 except that CU-1 is on-line and CU-0 is off-line.

12 FONL-ACT: Same as 10 except the currently active processor is forced on-line and the other is forced off-line.

13 CLR-FONL: Removes on-line and off-line forces and allows automatic processor recovery action to determine the on-line and off-line CU.

14 CLR-EAI: Clears all of the following which may be in effect: forces on or off-line, sets on primary or secondary disk, and timer inhibits. Also clears input parameter buffer in EAI.

15 CFT-INIT: Causes all craft interface related processes in the active CU to be initialized.

20 SET PRI-DISK: Inhibits automatic processor recovery disk unit selection and forces both processors to access their primary system disk units on a bootup.

21 CLR PRI-DISK: Removes force on primary system disk unit selection.

22 SET SEC-DISK: Same as 20 except this forces the processors to access their secondary system disk units.

23 CLR SEC-DISK: Removes force on secondary system disk unit selection.

24 SET INH-TIMER: Inhibits the sanity timer from expiring and initiating automatic recovery action.

25 CLR INH-TIMER: Removes the sanity timer inhibit.

26 SET PRM-TRAP: Causes the next failure PRM to be displayed in reverse video and to remain displayed until released by command 27 or a second execution of command 26.

27 CLR PRM-TRAP: Releases any trapped failure PRMs and allows further PRMs to be displayed.

30† SET BACKUP-ROOT: Forces the processor to initialize in the backup root file system.

31† CLR BACKUP-ROOT: Allows the processor to initialize in the primary root file system.

32† SET MIN-CONFIG: Forces the processor to initialize DMERT only with no application software.

33† CLR MIN-CONFIG: Allows the processor to initialize with DMERT operating system and application software.

34† SET INH-HDW-CHK: Inhibits hardware checks from initiating automatic recovery action.

35† CLR INH-HDW-CHK: Allows the hardware checks to initiate automatic recovery action.

36† SET INH-SFT-CHK: Inhibits software checks from initiating automatic recovery action.

37† CLR INH-SFT-CHK: Allows software checks to initiate automatic recovery action.

38† SET INH-ERR-INT: Inhibits error interrupts.

39† CLR INH-ERR-INT: Allows error interrupts.

40† SET INH-CACHE: Inhibits use of cache memory.

41† CLR INH-CACHE: Allows use of cache memory.

42† SET APPL-PARAM: Allows the setting of a parameter which is made available to application software.

43† CLR APPL PARAM: Clears the application parameter.

50‡ APPL: Signals the application software to initialize.

51‡ INIT: Force initialization of DMERT (level 1 initialization).

52‡ BOOT: Force bootstrap and reload DMERT from disk (level 2 initialization).

53‡ BOOT+ECD: Same as 52 plus reload equipment configuration data (level 3 initialization).

54‡ BOOT+MEM: Same as 53 plus clear memory (level 4 initialization).

55‡§ LDTAPE-0: Load selected disk from tape unit 0.

56‡§ LDTAPE-1: Load selected disk from tape unit 1.

† Commands 30 through 43 generate "next state" information within the MTTYPC which is sent to the 3B20D processor on the next execution of commands 50 through 56.

‡ Commands 50 through 56, in addition to the description given, cause the current "next state" information to be sent to the processor.

§ Commands 55 and 56 require a CU to be forced online (command 10, 11, or 12) and a disk unit to be selected (command 20 or 22).

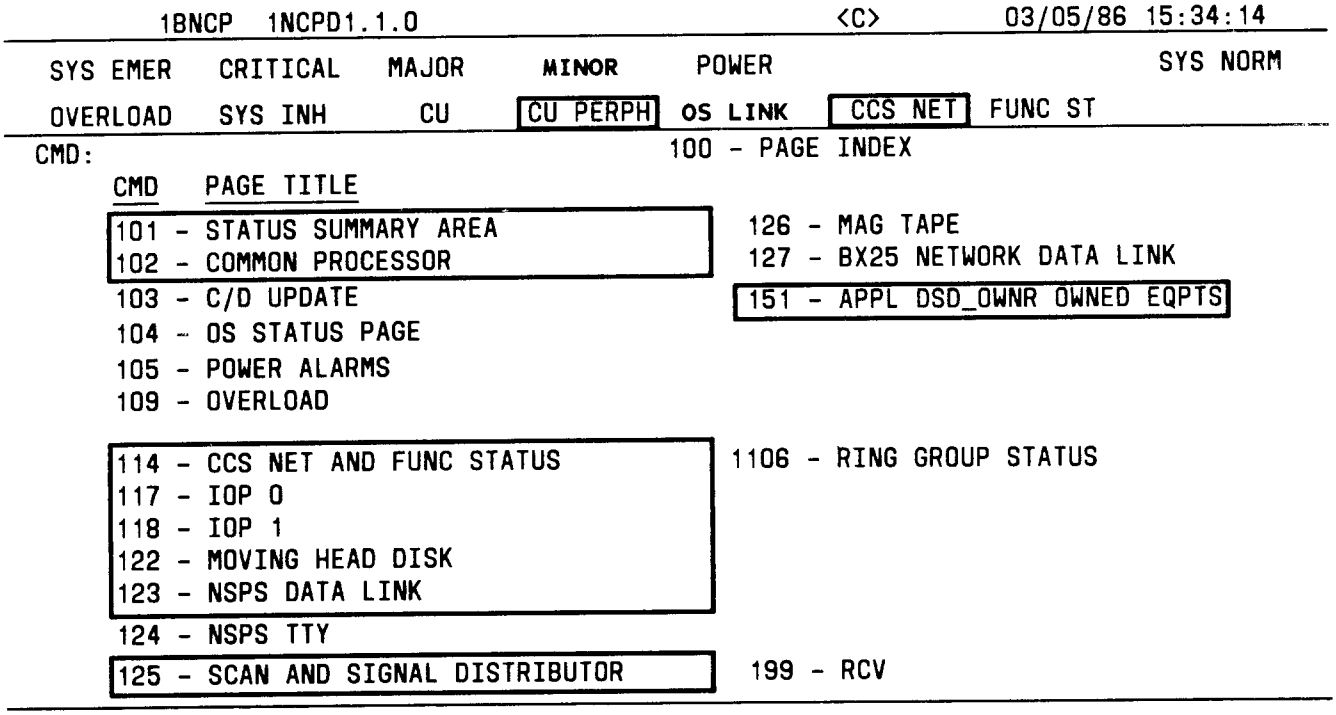

Fig. 1—Page Index Display

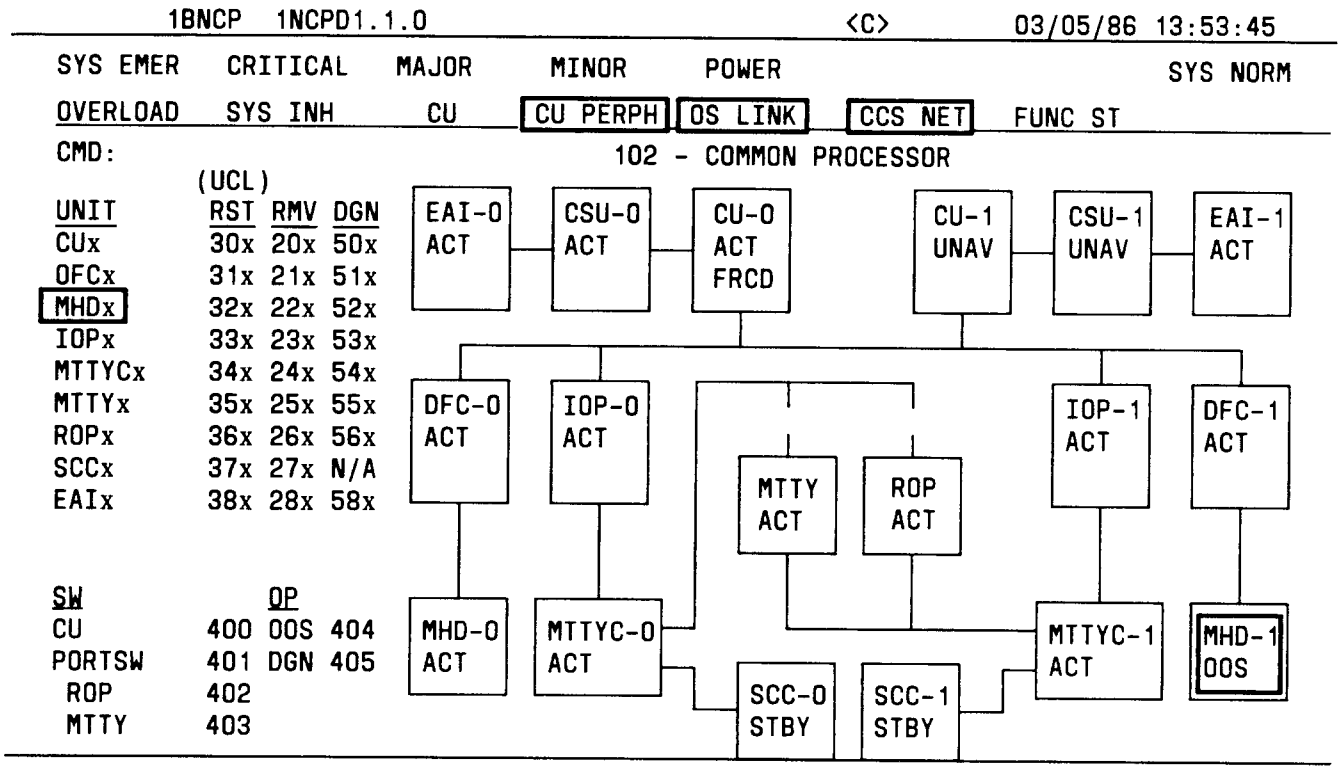

Fig. 2—Common Processor Display

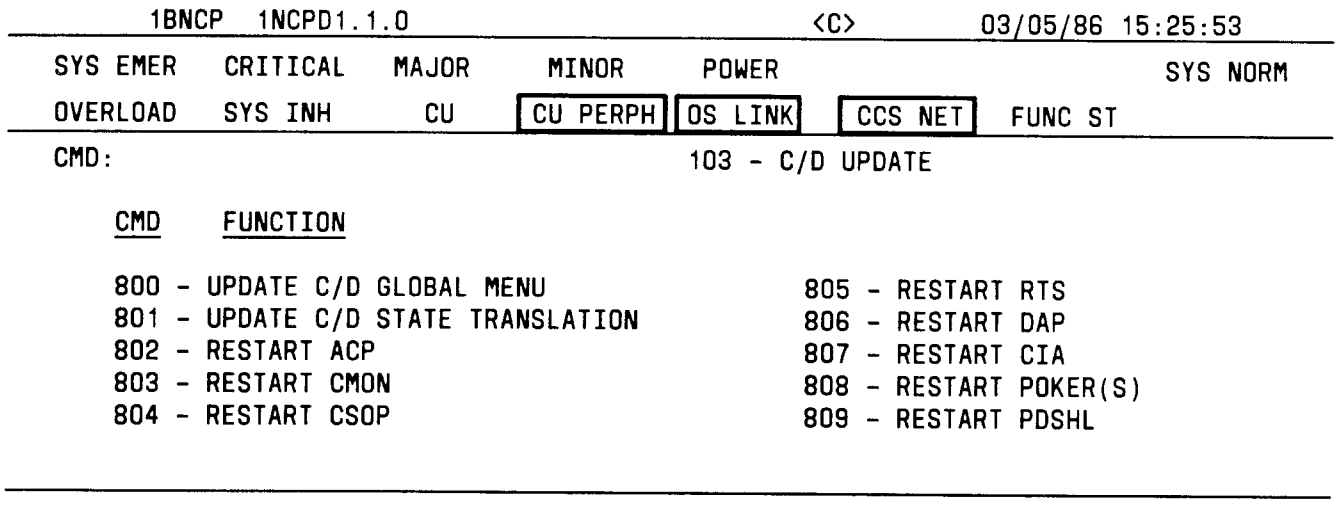

Fig. 3—Command and Display Update

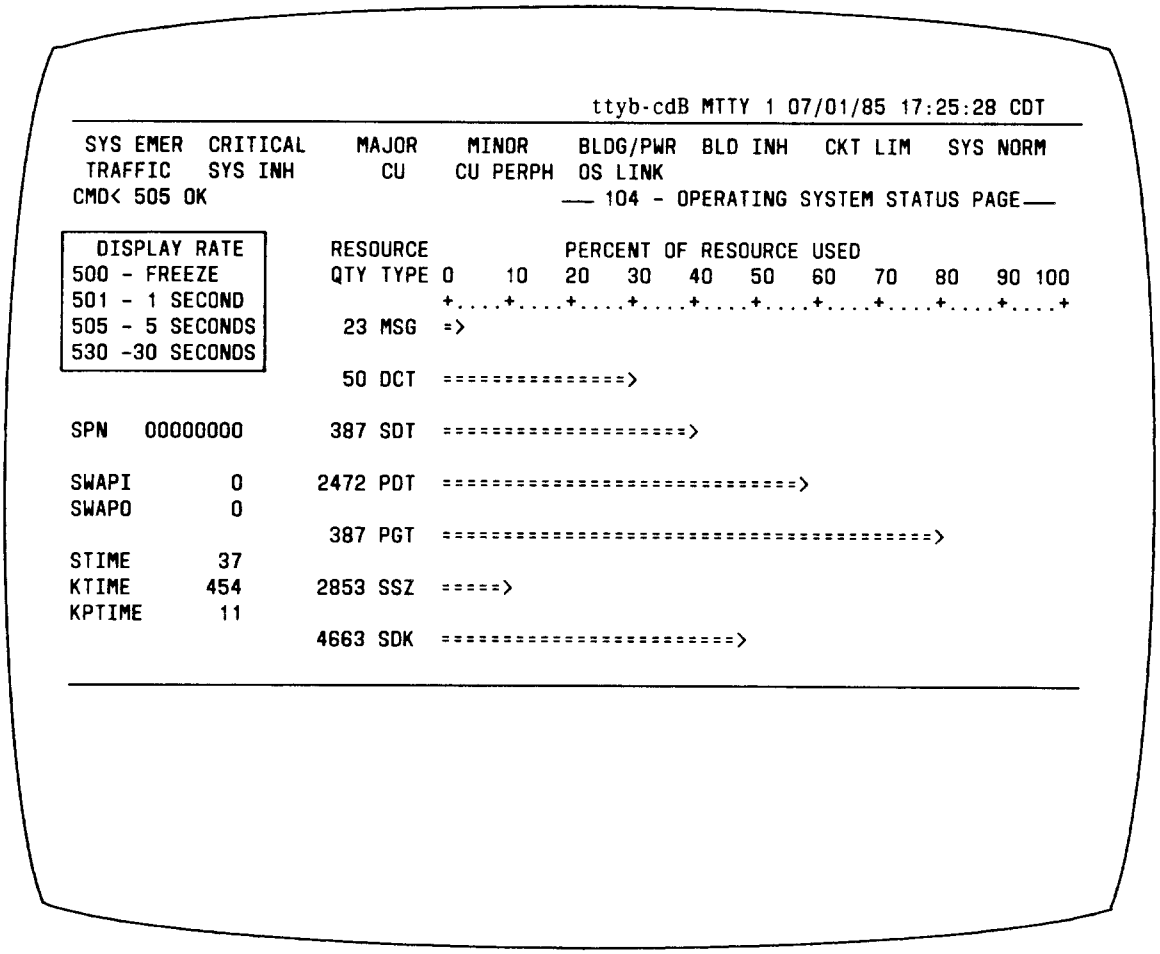

Fig. 4—Operating System Status Display

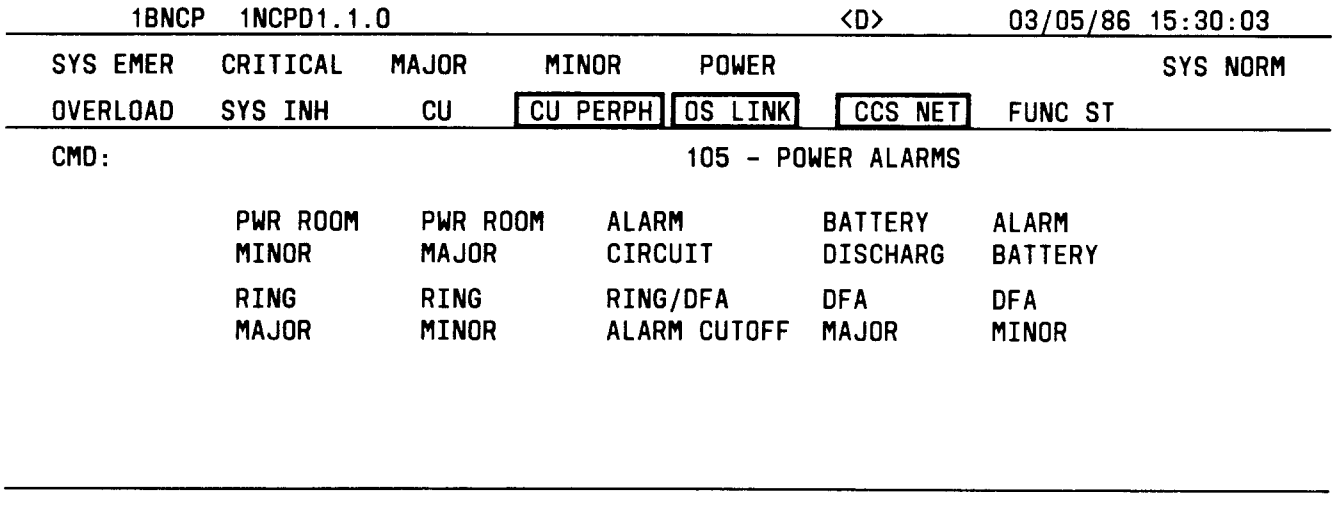

Fig. 5—Power Alarm Display

```
     1BNCP   1NCPD1.1.0                                  <D>        03/05/86 15:56:22
 SYS EMER   CRITICAL   MAJOR     MINOR     POWER                                SYS NORM
 OVERLOAD   SYS INH     CU     [CU PERPH] [OS LINK]  [CCS NET]  FUNC ST
 CMD:                        109 - OVERLOAD

                          TYPE                    OVERLOAD STATE

                        PROCESSOR                 NOT OVERLOADED

                        DISK                      NOT OVERLOADED

                        FILE SYSTEM RESOURCE      NOT OVERLOADED

                        MESSAGE BUFFER RESOURCE   NOT OVERLOADED
```

Fig. 6—Overload Display

```
     1BNCP   1NCPD1.1.0                                  <C>        03/05/86 13:59:11
 SYS EMER   CRITICAL   MAJOR     MINOR     POWER                                SYS NORM
 OVERLOAD   SYS INH     CU     [CU PERPH] [OS LINK]  [CCS NET]  FUNC ST
 CMD:                                        114 - CCS NET AND FUNC STATUS
    EVEN A-LK      ODD A-LK
      UNKN           UNKN

                                  FUNCTION STATUS

 OP      INDEX  TYPE    OWNER          LOCAL                MATE              MISC

 LST   450 0     NCP    OWNR         EQUIP__ACT        UNKNOWN__UNKNOWN      CNI_ACT
 STAT  451
 SLK   452 1     DSD    OWNR         EQUIP__ACT        UNKNOWN--UNKNOWN      NORMAL
```

Fig. 7—CCS Network and Function Status Display

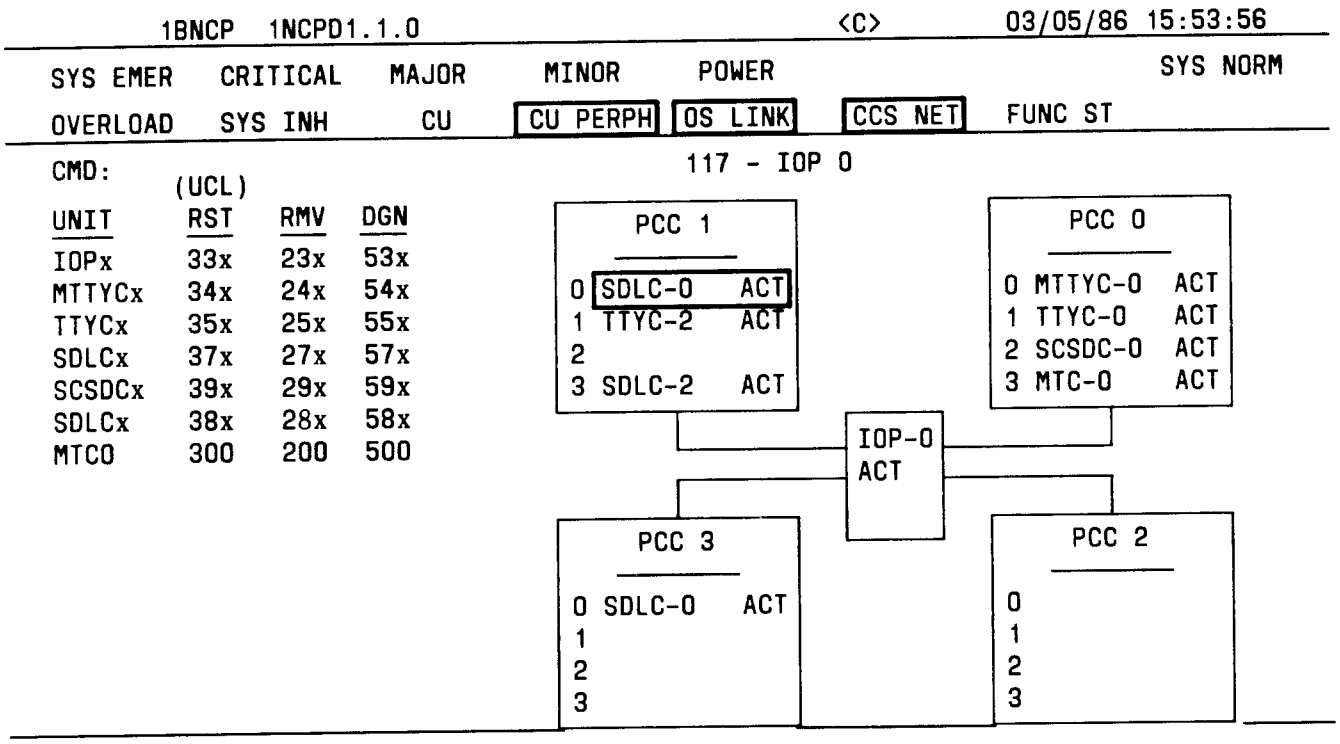

Fig. 8—Input/Output Processor 0 Display

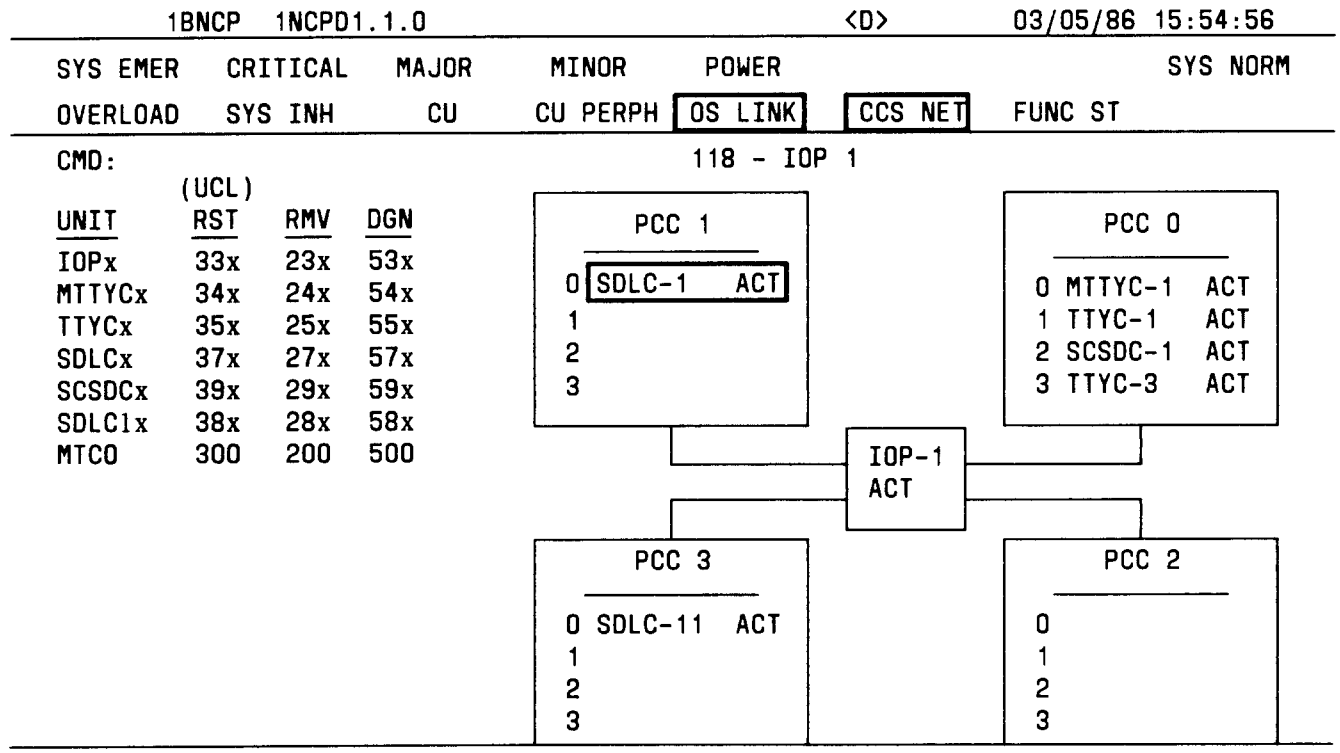

Fig. 9—Input/Output Processor 1 Display

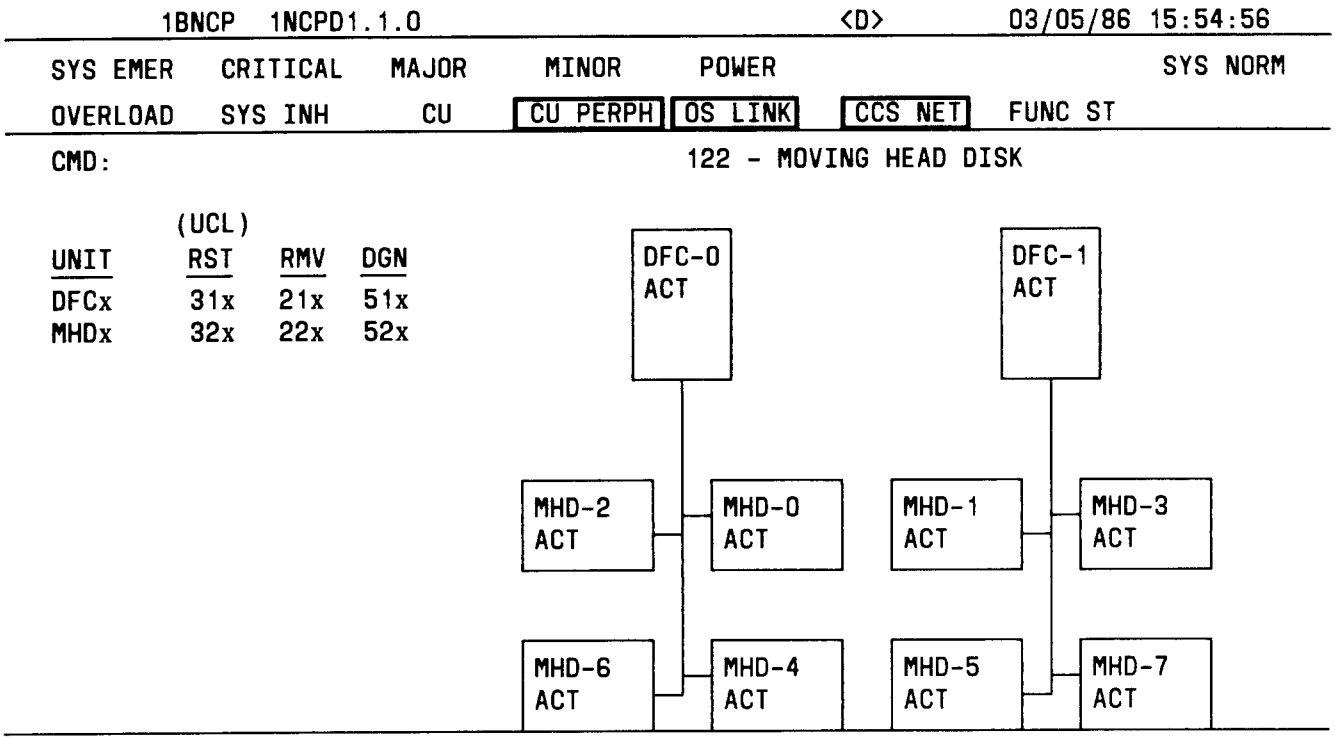

Fig. 10—Moving Head Disk Display

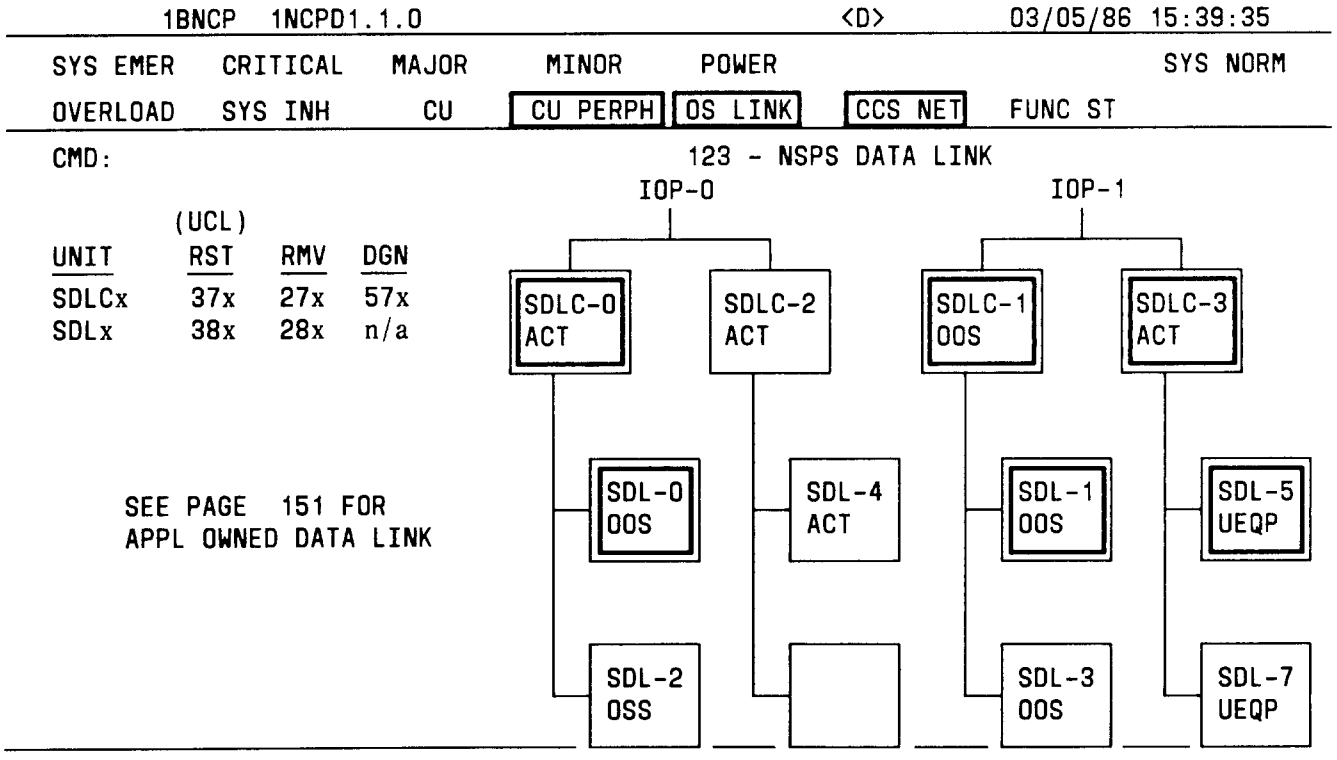

Fig. 11—Network Support Data Link Display

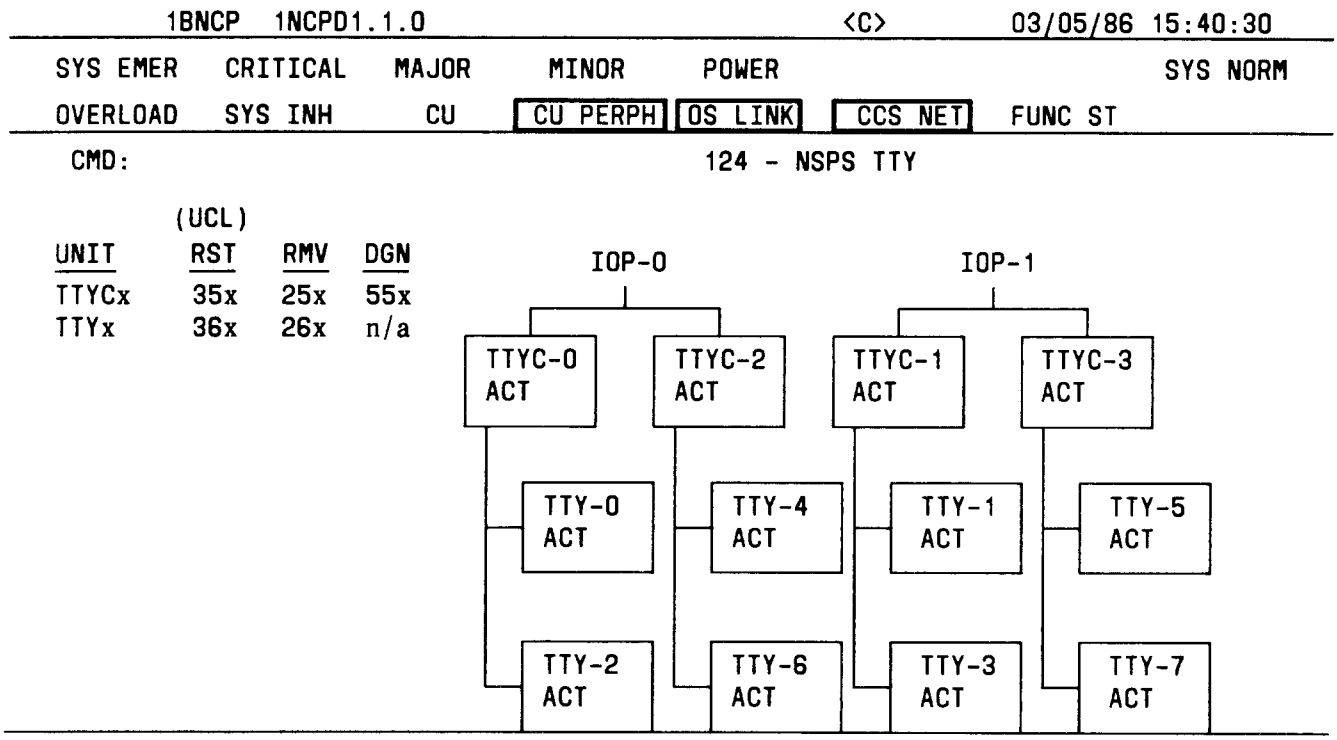

Fig. 12—Network Support TTY Display

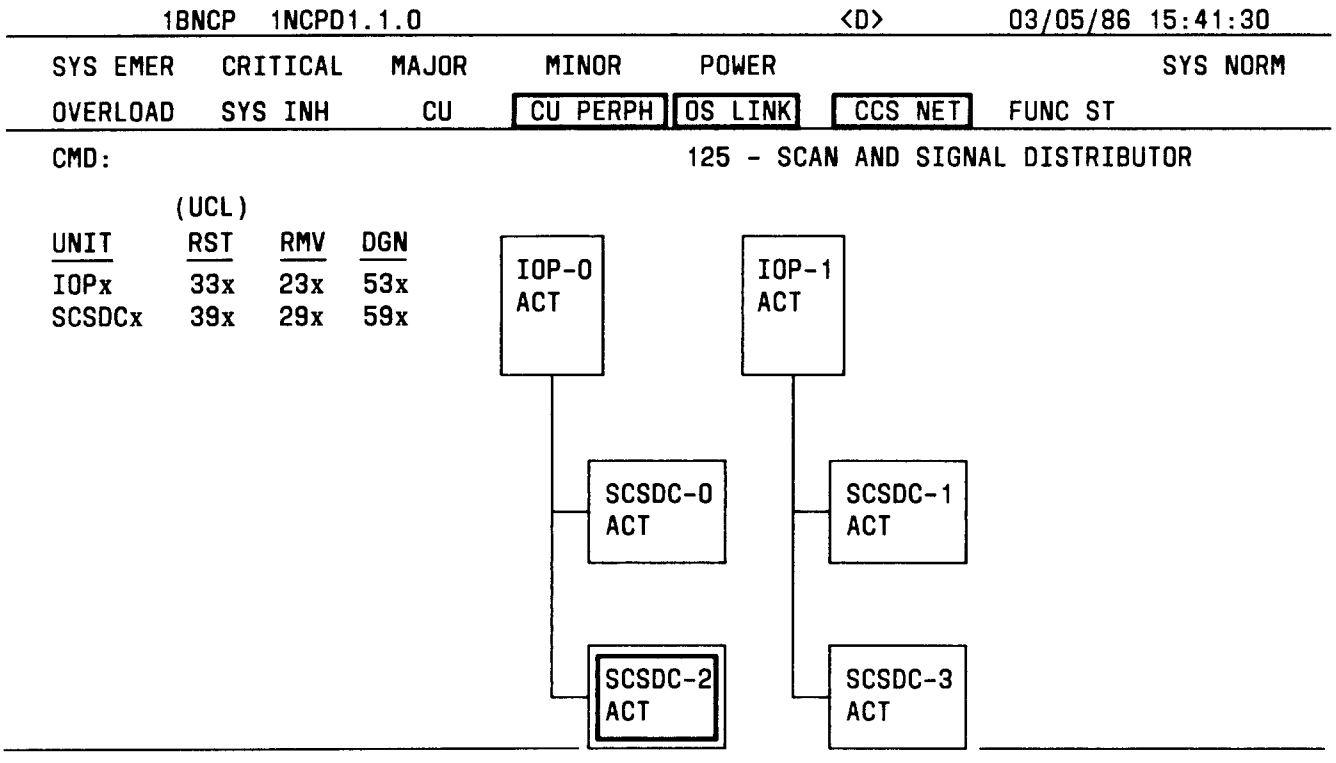

Fig. 13—Scan and Signal Distributor Display

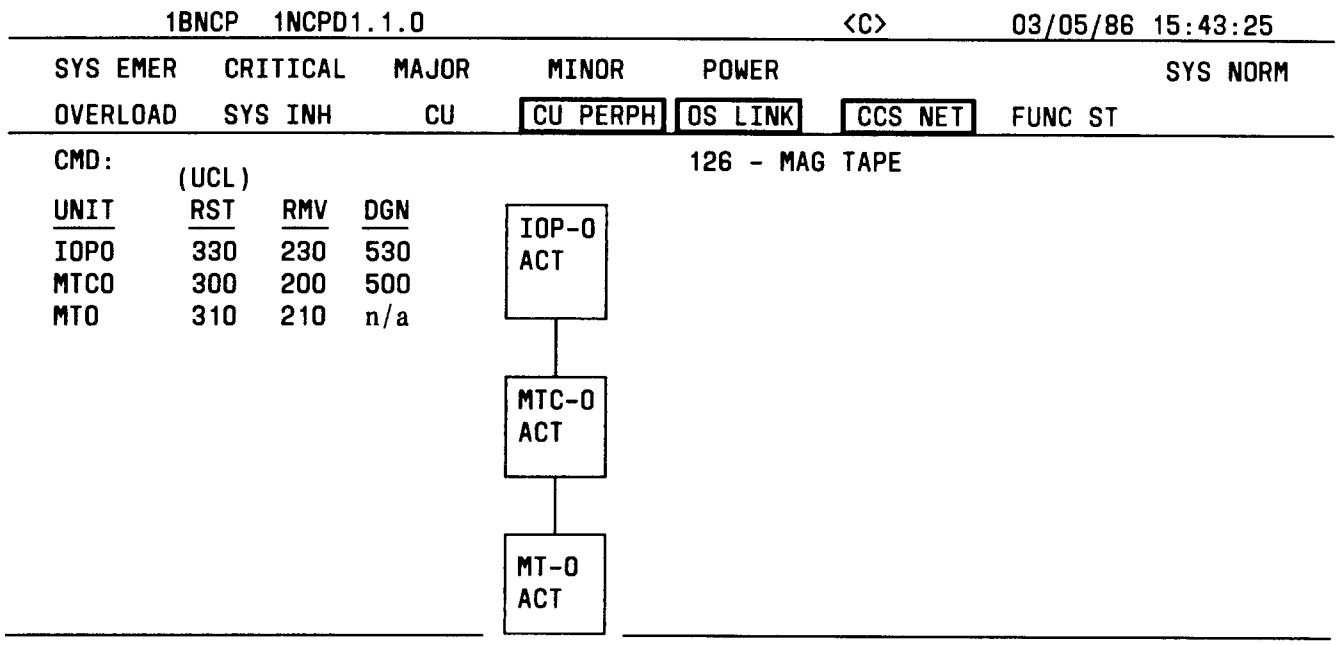

Fig. 14—Magnetic Tape Display

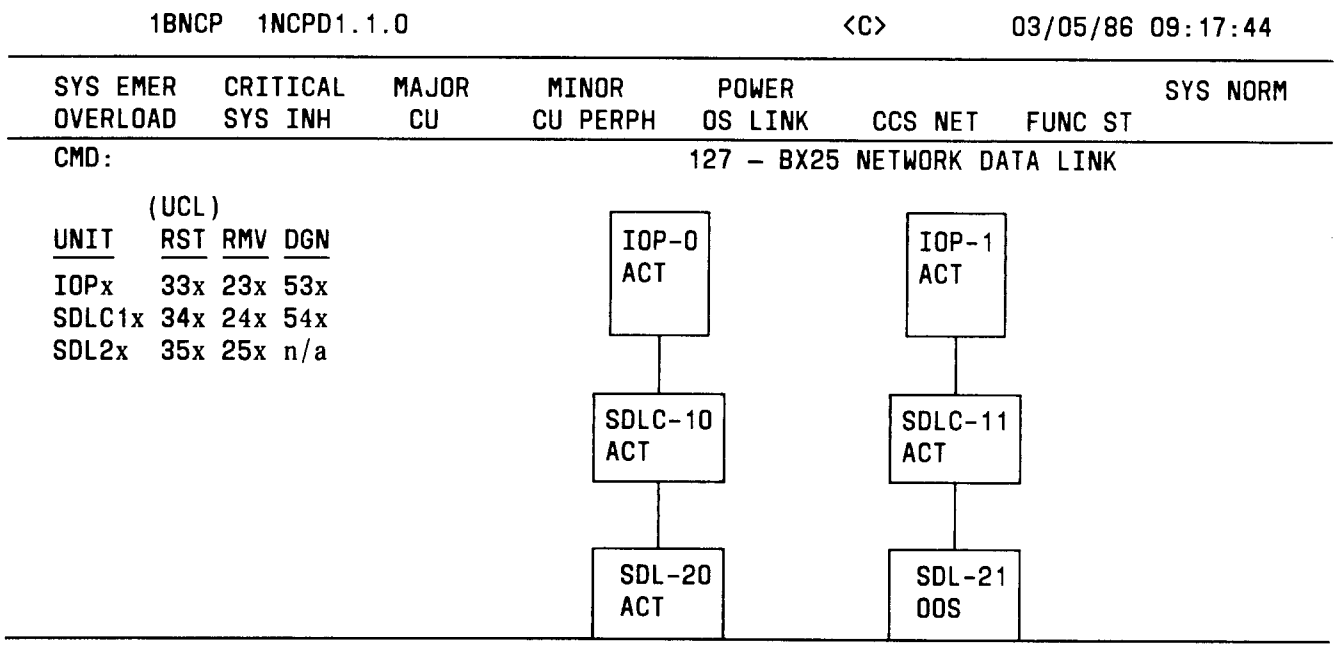

Fig. 15—BX.25 Network Data Link Display

```
        1BNCP   1NCPD1.1.0                                  <D>        03/05/86 15:44:00
  SYS EMER   CRITICAL   MAJOR     MINOR     POWER                                  SYS NORM
  OVERLOAD   SYS INH      CU     [CU PERPH] [OS LINK]  [CCS NET]  FUNC ST
  CMD:                                          151 APPL DSD_OWNR OWNED EQPTS

                                               NAME-UNIT    STATE     CONTROLLER

      SEE PAGE 117 OR 118                      SDL-16       ACT       SDLC-8
      FOR CONTROLLER'S STATE                   SDL-17       STBY      SDLC-9
```

Fig. 16—Application Owned Equip Display

```
        1BNCP   1NCPD1.1.0                                  <D>        03/05/86 09:17:32
  SYS EMER   CRITICAL   MAJOR     MINOR     POWER                                  SYS NORM
  OVERLOAD   SYS INH      CU     CU PERPH  OS LINK    CCS NET   FUNC ST
  CMD:                                          1106 - RING GROUP STATUS
           (UCL)
  UNIT      RST  RMV  DGN
  RPCN00-00 300  200  500
  LN00-0x   30x  20x  50x
  RPCN32-00 310  210  510
  LN32-0x   31x  21x  51x

  RING ACTIVE

  400 - OP:RING;DETD
```

LN32-05 UNEQ	LN32-06 UNEQ	LN32-07 UNEQ
LN32-04 ACT NORM	LN32-03 UNEQ	LN32-02 UNEQ
RPCN32-00 ACT NORM	LN32-01 ACT NORM	
LN00-05 UNEQ	LN00-06 UNEQ	LN00-07 UNEQ
LN00-04 ACT NORM	LN00-03 UNEQ	LN00-02 UNEQ
RPCN00-00 ACT NORM	LN00-01 ACT NORM	

Fig. 17—Ring Group Status Display

```
        1BNCP   1NCPD1.1.0                                  <D>        03/05/86 15:46:00
  SYS EMER   CRITICAL   MAJOR     MINOR     POWER                                  SYS NORM
  OVERLOAD   SYS INH      CU     [CU PERPH] [OS LINK]  [CCS NET]  FUNC ST
  CMD:                                          ----- EMERGENCY ACTION PAGE -----
                                      MTTY_2
  CU-0_ [ACT RUN FONL]                EAI-0_[ASW]   PRM-0 EB31 0500 0000 0000 79 CB 00
  CU-1_            [FOFL]             EAI-1_[ASW]   PRM-1 01B1 DD00 7BBD 1DDF 19 EQ 00
 SCCS_
              SET CLR            CU-0 CU-1   SET CLR
 10 FONL-0     20 21 PRI-DISK__               30 [31] BACKUP-ROOT_        50 APPL
 11 FONL-1     22 23 SEC-DISK__               32 [33] MIN-CONFIG__        51 INIT
 12 FONL-ACT   24 25 INH-TIMER_               34 [35] INH-HDW-CHK_        52 BOOT
 13 CLR-FONL   26 27 PRM-TRAP__               36 [37] INH-SFT-CHK_        53 BOOT+ECD
                                              38 [39] INH-ERR-INT_        54 BOOT+MEM
 14 CLR-EAI    28 PRM-DUMP                    40 [41] INH-CACHE___        55 LDTAPE-0
 15 CFT-INIT                                  42 [43] APPL-PARAM__        56 LDTAPE-1
```

Fig. 18—Emergency Action Display